MILL STEEL

F R A M I N G

Structural Technical Data

TABLE OF CONTENTS

STRUCTURAL FRAMING

ICC ESR-4205 ACCREDITED

STUD AND JOIST

Studs are a general purpose framing component used in a number of applications including exterior curtain walls, load bearing walls, headers and floor and roof joists.

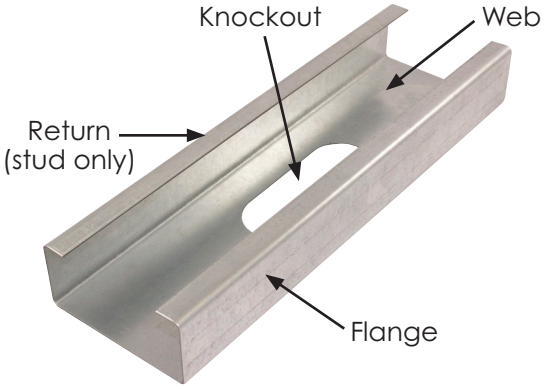

TRACK

Track is used as a closure to stud and joist ends as well as framing components to heads and sills. Note: 10' is the standard length. Custom lengths available upon request.

STRUCTURAL STUD PROFILE INFORMATION

WEB WIDTHS	2 ½"	3 ⅝"	4"	6"	8"	10"	12"

FLANGE	1 ⅝"	2"	2 ½"	3"	3 ½"

RETURN: Varies by part

MATERIAL THICKNESS

GAUGE	20	18	16	14	12
MILS	33 (33ksi)	43 (33ksi)	54 (50ksi)	68 (50ski)	97 (50ksi)

WEB PUNCH-OUT SIZE AND LOCATION

Mill Steel Framing studs and joists are manufactured with punch-outs along the centerline of the web to accommodate plumbing and electrical installation. The punch-out is provided 12" from the indexed end and the intermediate punch-outs are placed at 24" o.c. intervals. The 34" by 2" punch-out is available for 2 1/2" web members only. Unpunched studs are available upon request.

Punch-Out Dimensions

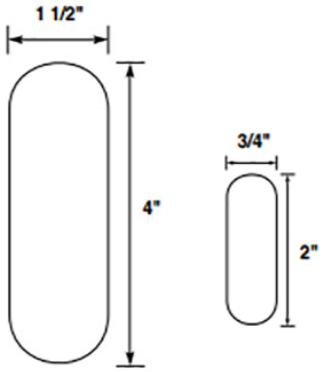

Framing Components

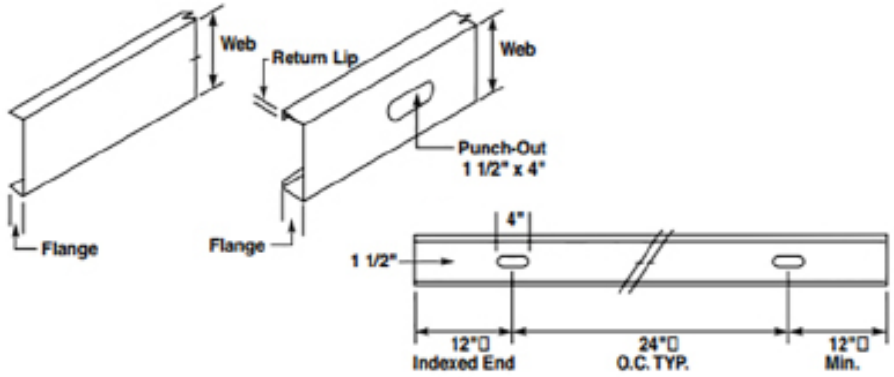

OVERVIEW AND PRODUCT SPECIFICATION

PRODUCT DESIGNATION

As specified under AISI S100-16 and S240-15, and the IBC 2018 Building Code.

Depth (1)	Type (2)	Flange (3)	-	Thickness (4)
600	S	162	-	54

Depth (1): The first set of numbers represents the depth of the member to 2 decimal places without the use of a decimal point.

- Example: 600 = 6.00", 362 = 3.62" web depth

Type (2): The first set of numbers represents the depth of the member to 2 decimal places without the use of a decimal point.

- Example: S = Stud, T = Track

Flange (3): The second set of numbers represents the member flange width to 2 decimal places without the use of a decimal point.

- Example: 162 = 1.625" flange

Thickness (4): The last set of numbers is the minimum uncoated metal thickness expressed in mils (.001in). These thicknesses correspond to reference gauges as follows: 33(20ga), 43(18ga), 54(16ga), 68(14ga), 97(12ga). The miles define the minimum allowable uncoated metal thickness and are 95% of the design thickness. The 5% variance in metal thickness is permitted by section A2.4 of the NASPEC.

STEEL THICKNESS

Designation Thickness (Mils)	Minimum Thickness (in)	Design Thickness[1] (in)	Design Inside Corner Radii[2] (in)	Reference Gauge No.
18	0.0179	0.0188	0.0844	25
30	0.0296	0.0312	0.0782	20-Drywall
33	0.0329	0.0346	0.0765	20-Structural
43	0.0428	0.0451	0.0712	18
54	0.0538	0.0566	0.0849	16
68	0.0677	0.0713	0.1070	14
97	0.0966	0.1017	0.1526	12

[1] Minimum Thickness represents 95% of the design thickness and is the minimum acceptable thickness delivered to the jobsite based on section A2.4 of the AISI S100-07 with S2-10 Supplement.

[2] The tables in this catalog are calculated based on inside corner radii listed in this table.

OVERVIEW AND PRODUCT SPECIFICATION

DEFINITION OF STRUCTURAL PROPERTY SYMBOLS:

Gross Properties

- **Ix:** Moment of inertia of gross section about the X-X axis (strong axis).
- **Sx:** Section modulus about the X-X axis (strong axis).
- **Rx:** Radius of gyration of the gross section about the X-X axis.
- **Iy:** Moment of inertia of gross section about the Y-Y axis (weak axis).
- **Ry:** Radius of gyration of the gross section about the Y-Y axis.

Effective Properties

- **Ixe:** Effective moment of inertia about the X-axis.
- **Sxe:** Effective section modulus about the X-X axis (strong axis) stress = Fy.
- **Ma:** Allowable Bending Moment - Based on the effective section modulus and the allowable stress including the strength increase from the cold-work of forming (section A3.3.2) where applicable.
- **Mad:** Allowable Bending Moment - Based on Distortional Bucking Strength calculated per Sections F4, F4.1 of AISI S100-16.
- **Vag:** Allowable strong axis shear away from punchout, calculated in accordance with Section G2 of AISI S100-16.
- **Vanet:** Allowable strong axis shear at punchout, calculated in accordance with Section G3 of AISI S100-16.

Torsional and Other Properties

- **J:** St. Venant Torsional Constant.
- **Cw:** Torsional warping constant.
- **m:** Distance from shear center to mid-plane of web.
- **Xo:** MDistance from the shear center to the centroid along the principal X-axis.
- **Ro:** Polar radius of gyration about the centroidal principal axis.
- **b:** $1-(Xo/Ro)^2$
- **Lu:** The longest weak axis (Ly) and torsional (Lt) unbraced length at which lateral torsional buckling is restrained in accordance with Section F2.1 of AISI S100-16.

STRUCTURAL STUD SECTION PROPERTIES

Structural (S) Stud Section Properties

			Gross Properties							Effective Properties						Torsional Properties						
Member	Design Thickness (in)	F_y (ksi)	Area (in^2)	Weight (lb/ft)	I_x (in^4)	S_x (in^3)	R_x (in)	I_y (in^4)	R_y (in)	I_x (in^4)	S_x (in^3)	M_a (in-k)	M_{ad} (in-k)	Va_g (lb)	Va_{net} (lb)	Jx1000 (in^4)	C_w (in^6)	X_o (in)	m (in)	R_o (in)	β	L_u (in)
250S162-33	0.0346	33	0.223	0.76	0.235	0.188	1.027	0.087	0.624	0.235	0.180	3.55	3.41	975	399	0.089	0.146	-1.470	0.859	1.898	0.401	44.1
250S162-43	0.0451	33	0.289	0.98	0.302	0.242	1.022	0.111	0.620	0.302	0.240	5.22	4.72	1265	394	0.196	0.184	-1.457	0.852	1.885	0.402	42.1
250S162-54	0.0566	33	0.358	1.22	0.370	0.296	1.016	0.135	0.613	0.370	0.296	6.57	6.53	1553	373	0.383	0.223	-1.443	0.845	1.868	0.404	41.8
250S162-54	0.0566	50	0.358	1.22	0.370	0.296	1.016	0.135	0.613	0.370	0.284	9.42	8.32	2353	565	0.383	0.223	-1.443	0.845	1.868	0.404	33.9
250S162-68	0.0713	50	0.443	1.51	0.450	0.360	1.008	0.162	0.605	0.450	0.357	12.11	11.97	2866	519	0.752	0.268	-1.424	0.835	1.847	0.405	33.7
362S162-33	0.0346	33	0.262	0.89	0.551	0.304	1.450	0.099	0.616	0.551	0.268	5.29	5.20	1024	521	0.105	0.297	-1.308	0.789	2.048	0.592	42.6
362S162-43	0.0451	33	0.340	1.16	0.710	0.392	1.445	0.127	0.611	0.710	0.372	7.34	7.29	1739	676	0.230	0.376	-1.297	0.782	2.036	0.594	42.5
362S162-54	0.0566	33	0.422	1.44	0.873	0.482	1.438	0.154	0.605	0.873	0.467	9.22	9.27	2341	705	0.451	0.457	-1.283	0.774	2.020	0.597	42.5
362S162-54	0.0566	50	0.422	1.44	0.873	0.482	1.438	0.154	0.605	0.873	0.444	13.28	12.87	3372	1016	0.451	0.457	-1.283	0.774	2.020	0.597	34.4
362S162-68	0.0713	50	0.524	1.78	1.069	0.590	1.429	0.186	0.596	1.069	0.574	17.19	16.91	4370	1004	0.887	0.552	-1.264	0.765	1.999	0.600	34.4
362S162-97	0.1017	50	0.724	2.46	1.436	0.792	1.408	0.241	0.577	1.436	0.776	27.54	27.05	5943	875	2.496	0.723	-1.226	0.745	1.954	0.606	34.5
362S200-33	0.0346	33	0.297	1.01	0.648	0.358	1.478	0.177	0.772	0.642	0.294	5.81	5.98	1024	521	0.118	0.577	-1.741	1.030	2.411	0.478	53.6
362S200-43	0.0451	33	0.385	1.31	0.836	0.461	1.474	0.227	0.767	0.836	0.427	8.43	8.41	1739	676	0.261	0.734	-1.729	1.024	2.398	0.480	53.5
362S200-54	0.0566	33	0.479	1.63	1.030	0.568	1.467	0.277	0.761	1.030	0.553	10.93	10.91	2341	705	0.511	0.896	-1.715	1.016	2.382	0.482	53.6
362S200-54	0.0566	50	0.479	1.63	1.030	0.568	1.467	0.277	0.761	1.030	0.490	14.66	14.84	3372	1016	0.511	0.896	-1.715	1.016	2.382	0.482	43.3
362S200-68	0.0713	50	0.595	2.02	1.266	0.698	1.458	0.337	0.753	1.266	0.666	19.95	19.67	4370	1004	1.008	1.089	-1.696	1.006	2.360	0.484	43.3
362S200-97	0.1017	50	0.826	2.81	1.712	0.945	1.440	0.446	0.735	1.712	0.929	32.04	29.65	5943	875	2.847	1.441	-1.658	0.986	2.316	0.487	43.6
362S250-43	0.0451	33	0.430	1.46	0.980	0.541	1.510	0.385	0.946	0.980	0.449	8.88	9.06	1739	676	0.292	1.230	-2.199	1.277	2.830	0.396	64.1
362S250-54	0.0566	33	0.535	1.82	1.210	0.668	1.504	0.473	0.940	1.210	0.582	11.51	12.06	2341	705	0.571	1.506	-2.184	1.269	2.813	0.397	64.3
362S250-54	0.0566	50	0.535	1.82	1.210	0.668	1.504	0.473	0.940	1.198	0.514	15.40	15.93	3372	1016	0.571	1.506	-2.184	1.269	2.813	0.397	52.0
362S250-68	0.0713	50	0.666	2.27	1.491	0.823	1.496	0.578	0.931	1.491	0.689	20.64	21.32	4370	1004	1.129	1.837	-2.165	1.259	2.791	0.398	52.0
362S250-97	0.1017	50	0.927	3.16	2.028	1.119	1.479	0.773	0.913	2.028	1.056	35.51	32.47	5943	875	3.197	2.452	-2.126	1.239	2.746	0.401	52.5
400S162-33	0.0346	33	0.275	0.94	0.692	0.346	1.586	0.103	0.611	0.692	0.299	5.91	5.81	976	595	0.110	0.363	-1.263	0.768	2.118	0.644	42.3
400S162-43	0.0451	33	0.357	1.21	0.892	0.446	1.581	0.131	0.606	0.892	0.417	8.23	8.17	1739	810	0.242	0.460	-1.252	0.761	2.106	0.647	42.2
400S162-54	0.0566	33	0.443	1.51	1.098	0.549	1.574	0.159	0.600	1.098	0.526	10.39	10.58	2603	944	0.473	0.560	-1.238	0.754	2.090	0.649	42.2
400S162-54	0.0566	50	0.443	1.51	1.098	0.549	1.574	0.159	0.600	1.098	0.498	14.90	14.44	3372	1223	0.473	0.560	-1.238	0.754	2.090	0.649	34.1
400S162-68	0.0713	50	0.550	1.87	1.346	0.673	1.564	0.192	0.591	1.346	0.648	19.41	19.13	4871	1356	0.933	0.677	-1.220	0.745	2.069	0.653	34.0
400S162-97	0.1017	50	0.762	2.59	1.813	0.907	1.542	0.250	0.572	1.813	0.892	31.65	30.41	6658	1207	2.628	0.889	-1.182	0.725	2.026	0.660	34.1
400S200-33	0.0346	33	0.310	1.05	0.812	0.406	1.619	0.183	0.769	0.804	0.329	6.49	6.67	976	595	0.124	0.697	-1.688	1.007	2.462	0.530	53.1
400S200-43	0.0451	33	0.402	1.37	1.048	0.524	1.615	0.235	0.764	1.048	0.478	9.45	9.05	1739	810	0.272	0.886	-1.676	1.000	2.450	0.532	53.0
400S200-54	0.0566	33	0.500	1.70	1.292	0.646	1.608	0.287	0.758	1.292	0.623	12.30	12.41	2603	944	0.534	1.083	-1.662	0.993	2.433	0.534	53.0
400S200-54	0.0566	50	0.500	1.70	1.292	0.646	1.608	0.287	0.758	1.292	0.549	16.43	16.61	3372	1223	0.534	1.083	-1.662	0.993	2.433	0.534	42.9
400S200-68	0.0713	50	0.622	2.12	1.590	0.795	1.599	0.349	0.750	1.589	0.751	22.48	22.08	4871	1356	1.054	1.318	-1.643	0.983	2.412	0.536	42.9
400S200-97	0.1017	50	0.864	2.94	2.156	1.078	1.580	0.463	0.732	2.156	1.064	36.69	33.25	6658	1207	2.978	1.749	-1.605	0.963	2.368	0.541	43.1
400S250-33[2]	0.0346	33	0.344	1.17	0.948	0.474	1.660	0.310	0.949							0.137	1.165	-2.151	1.259	2.878	0.441	63.7
400S250-43	0.0451	33	0.447	1.52	1.224	0.612	1.655	0.399	0.945	1.224	0.503	9.93	10.09	1739	810	0.303	1.486	-2.139	1.252	2.865	0.443	63.7
400S250-54	0.0566	33	0.556	1.89	1.512	0.756	1.649	0.490	0.938	1.512	0.653	12.91	13.47	2603	944	0.594	1.821	-2.124	1.244	2.848	0.444	63.8
400S250-54	0.0566	50	0.556	1.89	1.512	0.756	1.649	0.490	0.938	1.496	0.576	17.24	17.74	3372	1223	0.594	1.821	-2.124	1.244	2.848	0.444	51.6
400S250-68	0.0713	50	0.693	2.36	1.865	0.932	1.640	0.599	0.929	1.865	0.775	23.20	23.81	4871	1356	1.174	2.225	-2.105	1.235	2.826	0.445	51.6
400S250-97	0.1017	50	0.966	3.28	2.542	1.271	1.623	0.801	0.911	2.542	1.202	40.44	38.05	6658	1207	3.329	2.978	-2.066	1.214	2.781	0.448	51.9
600S162-33	0.0346	33	0.344	1.17	1.793	0.598	2.282	0.116	0.581	1.793	0.577	11.41	9.11	638	638	0.137	0.861	-1.072	0.677	2.588	0.828	41.1
600S162-43	0.0451	33	0.447	1.52	2.316	0.772	2.277	0.148	0.576	2.316	0.767	16.68	12.99	1416	1240	0.303	1.095	-1.062	0.670	2.577	0.830	40.9
600S162-54	0.0566	33	0.556	1.89	2.861	0.954	2.268	0.180	0.570	2.860	0.953	21.17	17.41	2739	1890	0.594	1.337	-1.049	0.663	2.563	0.833	40.7
600S162-54	0.0566	50	0.556	1.89	2.861	0.954	2.268	0.180	0.570	2.860	0.916	30.33	23.02	2823	1947	0.594	1.337	-1.049	0.663	2.563	0.833	33.0
600S162-68	0.0713	50	0.693	2.36	3.526	1.175	2.256	0.218	0.561	3.525	1.164	39.47	31.05	5350	2879	1.174	1.626	-1.032	0.655	2.543	0.835	32.8
600S162-97	0.1017	50	0.966	3.28	4.799	1.600	2.229	0.283	0.542	4.798	1.599	56.73	47.49	10472	3806	3.329	2.153	-0.997	0.636	2.501	0.841	32.5
600S200-33	0.0346	33	0.379	1.29	2.076	0.692	2.340	0.209	0.743	2.058	0.621	12.28	10.43	638	638	0.151	1.593	-1.457	0.901	2.855	0.740	51.6
600S200-43	0.0451	33	0.492	1.67	2.683	0.894	2.335	0.268	0.739	2.683	0.873	17.24	14.88	1416	1240	0.334	2.033	-1.446	0.894	2.844	0.742	51.4
600S200-54	0.0566	33	0.613	2.09	3.320	1.107	2.327	0.329	0.732	3.319	1.106	24.07	19.94	2739	1890	0.655	2.493	-1.432	0.887	2.829	0.744	51.3
600S200-54	0.0566	50	0.613	2.09	3.320	1.107	2.327	0.329	0.732	3.319	1.015	30.40	26.31	2823	1947	0.655	2.493	-1.432	0.887	2.829	0.744	41.6
600S200-68	0.0713	50	0.764	2.60	4.102	1.367	2.316	0.400	0.723	4.101	1.317	43.71	35.48	5350	2879	1.295	3.047	-1.415	0.878	2.809	0.746	41.4
600S200-97	0.1017	50	1.067	3.63	5.614	1.871	2.293	0.530	0.705	5.613	1.871	64.54	54.97	10472	3806	3.679	4.080	-1.378	0.859	2.767	0.752	41.2
600S250-43	0.0451	33	0.537	1.83	3.083	1.028	2.396	0.458	0.923	3.083	0.918	18.14	15.72	1416	1240	0.364	3.411	-1.874	1.136	3.179	0.652	62.4
600S250-54	0.0566	33	0.670	2.28	3.820	1.273	2.389	0.562	0.917	3.819	1.159	22.90	21.21	2739	1890	0.715	4.194	-1.860	1.129	3.163	0.654	62.3
600S250-54	0.0566	50	0.670	2.28	3.820	1.273	2.389	0.562	0.917	3.766	1.069	32.00	27.70	2823	1947	0.715	4.194	-1.860	1.129	3.163	0.654	50.5
600S250-68	0.0713	50	0.836	2.84	4.728	1.576	2.379	0.688	0.908	4.724	1.386	41.50	37.61	5350	2879	1.416	5.145	-1.842	1.119	3.142	0.657	50.4
600S250-97	0.1017	50	1.169	3.98	6.498	2.166	2.358	0.923	0.889	6.497	2.063	69.39	59.18	10472	3806	4.030	6.947	-1.803	1.100	3.099	0.661	50.2
800S162-33[1]	0.0346	33	0.413	1.41	3.583	0.896	2.944	0.125	0.550	3.385	0.710	14.03	12.16	474	474	0.165	1.630	-0.936	0.607	3.138	0.911	40.1
800S162-43	0.0451	33	0.537	1.83	4.635	1.159	2.938	0.160	0.546	4.500	1.019	20.14	17.62	1051	1051	0.364	2.076	-0.926	0.601	3.128	0.912	39.8
800S162-54	0.0566	33	0.670	2.28	5.737	1.434	2.927	0.194	0.539	5.702	1.334	26.36	23.96	2091	2091	0.715	2.539	-0.914	0.594	3.114	0.914	39.6
800S162-54	0.0566	50	0.670	2.28	5.737	1.434	2.927	0.194	0.539	5.600	1.229	36.79	31.31	2091	2091	0.715	2.539	-0.914	0.594	3.114	0.914	32.1
800S162-68	0.0713	50	0.836	2.84	7.092	1.773	2.913	0.235	0.530	7.070	1.664	49.81	42.89	4221	3367	1.416	3.093	-0.899	0.586	3.094	0.916	31.9
800S162-97	0.1017	50	1.169	3.98	9.717	2.429	2.883	0.305	0.511	9.714	2.429	72.71	68.22	10885	5938	4.030	4.114	-0.866	0.568	3.053	0.920	31.4
800S200-33[1]	0.0346	33	0.448	1.52	4.097	1.024	3.024	0.227	0.712	4.096	0.816	16.12	14.09	474	474	0.179	2.971	-1.288	0.817	3.363	0.853	50.6
800S200-43	0.0451	33	0.582	1.98	5.303	1.326	3.018	0.292	0.708	5.302	1.293	25.54	20.34	1051	1051	0.395	3.797	-1.277	0.811	3.353	0.855	50.3
800S200-54	0.0566	33	0.726	2.47	6.574	1.644	3.009	0.357	0.701	6.573	1.643	35.75	27.55	2091	2091	0.775	4.663	-1.265	0.804	3.338	0.856	47.8
800S200-54	0.0566	50	0.726	2.47	6.574	1.644	3.009	0.357	0.701	6.573	1.499	44.87	36.01	2091	2091	0.775	4.663	-1.265	0.804	3.338	0.856	40.7
800S200-68	0.0713	50	0.907	3.09	8.143	2.036	2.996	0.435	0.692	8.141	1.964	65.21	49.13	4221	3367	1.537	5.712	-1.248	0.796	3.319	0.859	38.4
800S200-97	0.1017	50	1.271	4.32	11.207	2.802	2.970	0.577	0.674	11.204	2.801	96.63	77.83	10885	5938	4.381	7.684	-1.214	0.777	3.278	0.863	37.2
800S250-43	0.0451	33	0.627	2.13	6.017	1.504	3.097	0.500	0.893	6.015	1.314	25.96	21.41	1051	1051	0.425	6.374	-1.675	1.043	3.632	0.787	61.5
800S250-54	0.0566	33	0.783	2.66	7.467	1.867	3.089	0.614	0.886	7.466	1.712	33.82	29.16	2091	2091	0.836	7.850	-1.661	1.036	3.617	0.789	61.4

SECTION PROPERTIES TABLE NOTES:

1. Calculated properties are based on AISI S100-16, North American Specification for Design of Cold-Formed Steel Structural Members.
2. The centerline bend radius is based on inside corner radii shown in thickness chart.
3. Effective properties incorporate the strength increase from the cold work of forming as applicable per AISI A3.3.2.
4. Tabulated gross properties are based on full-unreduced cross section of the studs, away from punchouts.
5. For deflection calculations, use the effective moment of inertia.
6. Allowable moment includes cold-work of forming.
7. For the steels that have both 33 and 50 ksi listing, if the design is based on 50 ksi, the 50 ksi steel needs to be specified. (ex. 3.625 S137 16-50 (50 ksi)
8. Web depth for track sections is equal to the nominal height plus 2 times the design thickness plus the bend radius. Hems on non-structural rack sections are ignored.

STRUCTURAL STUD SECTION PROPERTIES

Structural (S) Stud Section Properties

			Gross Properties							Effective Properties						Torsional Properties						
Member	Design Thickness (in)	F_y (ksi)	Area (in^2)	Weight (lb/ft)	I_x (in^4)	S_x (in^3)	R_x (in)	I_y (in^4)	R_y (in)	I_x (in^4)	S_x (in^3)	M_a (in-k)	M_{ad} (in-k)	Va_g (lb)	Va_{net} (lb)	Jx1000 (in^4)	C_w (in^6)	X_o (in)	m (in)	R_o (in)	β	L_u (in)
800S250-54	0.0566	50	0.783	2.66	7.467	1.867	3.089	0.614	0.886	7.378	1.525	45.66	37.84	2091	2091	0.836	7.850	-1.661	1.036	3.617	0.789	49.8
800S250-68	0.0713	50	0.978	3.33	9.263	2.316	3.077	0.752	0.877	9.241	2.059	61.65	51.85	4221	3367	1.658	9.652	-1.644	1.027	3.597	0.791	49.6
800S250-97	0.1017	50	1.372	4.67	12.793	3.198	3.053	1.009	0.858	12.790	3.054	102.70	83.02	10885	5938	4.731	13.091	-1.607	1.008	3.555	0.796	46.4
1000S162-43[1]	0.0451	33	0.627	2.13	8.028	1.606	3.577	0.168	0.518	7.523	1.302	25.74	21.70	836	836	0.425	3.430	-0.823	0.545	3.707	0.951	38.8
1000S162-54	0.0566	33	0.783	2.66	9.954	1.991	3.566	0.204	0.511	9.628	1.722	34.02	29.91	1661	1661	0.836	4.198	-0.812	0.538	3.693	0.952	38.5
1000S162-54	0.0566	50	0.783	2.66	9.954	1.991	3.566	0.204	0.511	9.391	1.572	47.07	38.68	1661	1661	0.836	4.198	-0.812	0.538	3.693	0.952	31.3
1000S162-68	0.0713	50	0.978	3.33	12.330	2.466	3.550	0.247	0.502	11.979	2.155	64.51	53.74	3345	3345	1.658	5.121	-0.798	0.531	3.673	0.953	31.0
1000S162-97	0.1017	50	1.372	4.67	16.974	3.395	3.517	0.320	0.483	16.968	3.270	97.90	87.70	9864	7177	4.731	6.827	-0.768	0.514	3.632	0.955	30.4
1000S200-43[1]	0.0451	33	0.672	2.29	9.088	1.818	3.676	0.309	0.677	8.603	1.470	29.05	25.40	836	836	0.456	6.236	-1.147	0.743	3.910	0.914	49.3
1000S200-54	0.0566	33	0.839	2.86	11.282	2.256	3.666	0.378	0.671	10.954	1.984	39.20	34.77	1661	1661	0.896	7.665	-1.135	0.737	3.896	0.915	49.1
1000S200-54	0.0566	50	0.839	2.86	11.282	2.256	3.666	0.378	0.671	10.770	1.705	51.05	45.06	1661	1661	0.896	7.665	-1.135	0.737	3.896	0.915	39.8
1000S200-68	0.0713	50	1.050	3.57	13.999	2.800	3.652	0.460	0.662	13.666	2.420	72.47	62.15	3345	3345	1.779	9.401	-1.120	0.729	3.877	0.917	39.6
1000S200-97	0.1017	50	1.474	5.01	19.343	3.869	3.622	0.610	0.643	19.337	3.741	112.01	100.50	9864	7177	5.082	12.679	-1.088	0.711	3.836	0.920	39.0
1000S250-43[1]	0.0451	33	0.717	2.44	10.205	2.041	3.771	0.531	0.860	10.203	1.617	31.95	26.87	836	836	0.486	10.481	-1.518	0.965	4.155	0.867	60.7
1000S250-54	0.0566	33	0.896	3.05	12.681	2.536	3.762	0.653	0.854	12.677	2.277	44.99	36.94	1661	1661	0.957	12.922	-1.505	0.958	4.141	0.868	60.5
1000S250-54	0.0566	50	0.896	3.05	12.681	2.536	3.762	0.653	0.854	12.661	1.879	56.27	47.66	1661	1661	0.957	12.922	-1.505	0.958	4.141	0.868	49.1
1000S250-68	0.0713	50	1.121	3.81	15.756	3.151	3.749	0.799	0.844	15.742	2.769	82.90	66.09	3345	3345	1.899	15.909	-1.488	0.950	4.121	0.870	48.8
1000S250-97	0.1017	50	1.576	5.36	21.834	4.367	3.722	1.073	0.825	21.828	4.181	140.63	107.14	9864	7177	5.433	21.632	-1.454	0.932	4.080	0.873	45.6
1200S162-54[1]	0.0566	33	0.896	3.05	15.736	2.623	4.191	0.212	0.486	14.744	2.109	41.68	35.04	1377	1377	0.957	6.340	-0.732	0.493	4.282	0.971	37.5
1200S162-54[1]	0.0566	50	0.896	3.05	15.736	2.623	4.191	0.212	0.486	14.299	1.914	57.32	44.93	1377	1377	0.957	6.340	-0.732	0.493	4.282	0.971	30.5
1200S162-68	0.0713	50	1.121	3.81	19.526	3.254	4.174	0.255	0.477	18.391	2.645	79.20	63.43	2771	2771	1.899	7.739	-0.719	0.485	4.262	0.972	30.2
1200S162-97	0.1017	50	1.576	5.36	26.977	4.496	4.138	0.332	0.459	26.738	4.091	122.50	105.39	8147	7411	5.433	10.331	-0.691	0.470	4.220	0.973	29.5
1200S200-54[1]	0.0566	33	0.953	3.24	17.668	2.945	4.307	0.394	0.643	16.679	2.425	47.93	41.25	1377	1377	1.017	11.550	-1.032	0.681	4.475	0.947	48.0
1200S200-54[1]	0.0566	50	0.953	3.24	17.668	2.945	4.307	0.394	0.643	16.335	2.073	62.07	53.22	1377	1377	1.017	11.550	-1.032	0.681	4.475	0.947	39.0
1200S200-68	0.0713	50	1.192	4.06	21.955	3.659	4.291	0.479	0.634	20.865	2.963	88.72	73.93	2771	2771	2.020	14.176	-1.017	0.673	4.456	0.948	38.7
1200S200-97	0.1017	50	1.677	5.71	30.428	5.071	4.259	0.635	0.615	30.177	4.660	139.52	121.84	8147	7411	5.783	19.150	-0.987	0.656	4.415	0.950	38.1
1200S250-54[1]	0.0566	33	1.009	3.43	19.687	3.281	4.417	0.683	0.823	18.832	2.483	49.06	44.20	1377	1377	1.078	19.505	-1.378	0.892	4.699	0.914	59.5
1200S250-54[1]	0.0566	50	1.009	3.43	19.687	3.281	4.417	0.683	0.823	18.437	2.149	64.34	56.71	1377	1377	1.078	19.505	-1.378	0.892	4.699	0.914	48.3
1200S250-68	0.0713	50	1.263	4.30	24.491	4.082	4.403	0.836	0.813	23.576	3.007	90.04	79.05	2771	2771	2.141	24.034	-1.362	0.884	4.680	0.915	48.1
1200S250-97	0.1017	50	1.779	6.05	34.027	5.671	4.373	1.122	0.794	33.837	5.038	150.83	130.54	8147	7411	6.134	32.734	-1.329	0.867	4.639	0.918	47.5
362S300-332	0.0346	33	0.366	1.24	0.871	0.481	1.543	0.463	1.125							0.146	1.478	-2.686	1.537	3.296	0.336	74.3
362S300-432	0.0451	33	0.475	1.62	1.125	0.621	1.539	0.596	1.12							0.322	1.888	-2.674	1.53	3.282	0.336	74.3
362S300-54	0.0566	33	0.592	2.01	1.391	0.767	1.533	0.734	1.114	1.379	0.607	11.99	12.82	2341	705	0.632	2.316	-2.659	1.522	3.265	0.337	74.5
362S300-54	0.0566	50	0.592	2.01	1.391	0.767	1.533	0.734	1.114	1.295	0.529	15.83	16.82	3372	1016	0.632	2.316	-2.659	1.522	3.265	0.337	60.2
362S300-68	0.0713	50	0.738	2.51	1.716	0.947	1.525	0.9	1.105	1.681	0.716	21.45	22.59	4370	1004	1.25	2.833	-2.64	1.512	3.243	0.337	60.4
362S300-97	0.1017	50	1.029	3.5	2.343	1.293	1.509	1.213	1.086	2.318	1.15	34.44	35.1	5943	875	3.548	3.803	-2.6	1.491	3.196	0.338	60.9
400S300-332	0.0346	33	0.379	1.29	1.084	0.542	1.692	0.479	1.125							0.151	1.786	-2.621	1.51	3.316	0.375	73.9
400S300-432	0.0451	33	0.492	1.67	1.4	0.7	1.687	0.617	1.12							0.334	2.282	-2.608	1.503	3.302	0.376	73.9
400S300-54	0.0566	33	0.613	2.09	1.732	0.866	1.681	0.76	1.114	1.717	0.68	13.44	17.91	2603	944	0.655	2.802	-2.594	1.496	3.285	0.377	74
400S300-54	0.0566	50	0.613	2.09	1.732	0.866	1.681	0.76	1.114	1.612	0.592	17.72	18.59	3372	1223	0.655	2.802	-2.594	1.496	3.285	0.377	59.9
400S300-68	0.0713	50	0.764	2.6	2.14	1.07	1.673	0.933	1.105	2.094	0.805	24.1	25.13	4871	1356	1.295	3.432	-2.574	1.486	3.263	0.378	60
400S300-97	0.1017	50	1.067	3.63	2.928	1.464	1.656	1.259	1.086	2.894	1.307	39.13	39.25	6658	1207	3.679	4.619	-2.535	1.465	3.217	0.379	60.3
600S300-54	0.0566	50	0.726	2.47	4.32	1.44	2.439	0.875	1.098	4.015	1.106	33.13	28.67	2823	1947	0.775	6.452	-2.299	1.372	3.527	0.575	59.1
600S300-68	0.0713	50	0.907	3.09	5.355	1.785	2.43	1.075	1.089	5.222	1.446	43.3	39.14	5350	2879	1.537	7.937	-2.28	1.363	3.506	0.577	58.9
600S300-97	0.1017	50	1.271	4.32	7.383	2.461	2.41	1.454	1.07	7.281	2.248	67.29	62.32	10472	3806	4.381	10.776	-2.241	1.343	3.461	0.581	58.8
600S350-54	0.0566	50	0.825	2.81	5.023	1.674	2.467	1.491	1.344	4.722	1.335	39.98	35.41	2823	1947	0.881	12.942	-3.037	1.787	4.137	0.461	74.4
600S350-68	0.0713	50	1.032	3.51	6.238	2.079	2.459	1.841	1.336	6.167	1.771	53.02	48.25	5350	2879	1.748	15.968	-3.018	1.777	4.116	0.462	74.4
600S350-97	0.1017	50	1.449	4.93	8.633	2.878	2.441	2.518	1.318	8.632	2.594	77.65	76.46	10472	3806	4.994	21.811	-2.979	1.757	4.071	0.464	74.4
800S300-54	0.0566	50	0.839	2.86	8.36	2.09	3.156	0.959	1.069	7.863	1.535	45.97	38.97	2091	2091	0.896	12.076	-2.073	1.271	3.924	0.721	58.6
800S300-68	0.0713	50	1.05	3.57	10.384	2.596	3.145	1.179	1.06	10.084	2.145	64.22	53.66	4221	3367	1.779	14.888	-2.055	1.262	3.904	0.723	58.4
800S300-97	0.1017	50	1.474	5.01	14.379	3.595	3.123	1.595	1.04	14.172	3.304	98.93	62.32	10885	5938	5.082	20.304	-2.017	1.243	3.861	0.727	58.1
800S350-54	0.0566	50	0.938	3.19	9.685	2.421	3.213	1.646	1.324	9.191	1.869	55.97	48.11	2091	2091	1.002	22.897	-2.766	1.668	4.442	0.612	73.1
800S350-68	0.0713	50	1.174	4	12.048	3.012	3.203	2.034	1.316	11.91	2.596	77.74	65.96	4221	3367	1.99	28.308	-2.748	1.658	4.421	0.614	72.9
800S350-97	0.1017	50	1.652	5.62	16.741	4.185	3.183	2.784	1.298	16.739	3.786	113.35	105.79	10885	5938	5.696	38.834	-2.71	1.639	4.378	0.617	72.7
1000S300-54	0.0566	50	0.953	3.24	14.08	2.816	3.845	1.024	1.037	13.441	1.903	56.97	49.12	1661	1661	1.017	19.888	-1.892	1.185	4.409	0.816	58
1000S300-68	0.0713	50	1.192	4.06	17.513	3.503	3.833	1.258	1.027	17.099	2.802	83.9	68.23	3345	3345	2.02	24.551	-1.874	1.176	4.389	0.818	57.8
1000S300-97	0.1017	50	1.677	5.71	24.325	4.865	3.808	1.703	1.007	23.972	4.499	134.7	111.66	9864	7177	5.783	33.57	-1.838	1.158	4.347	0.821	57.4
1000S350-54	0.0566	50	1.052	3.58	16.223	3.245	3.928	1.768	1.297	15.578	2.328	69.7	60.89	1661	1661	1.123	36.575	-2.546	1.566	4.857	0.725	72.2
1000S350-68	0.0713	50	1.317	4.48	20.209	4.042	3.917	2.185	1.288	20.027	3.418	102.33	83.89	3345	3345	2.232	45.277	-2.529	1.557	4.837	0.727	72
1000S350-97	0.1017	50	1.855	6.31	28.154	5.631	3.895	2.992	1.27	28.149	5.119	153.26	135.86	9864	7177	6.397	62.28	-2.492	1.538	4.795	0.73	71.6
1200S300-541	0.0566	50	1.066	3.63	21.705	3.618	4.513	1.074	1.004	21.045	2.273	68.04	58.81	1377	1377	1.138	30.051	-1.743	1.111	4.941	0.876	57.4
1200S300-68	0.0713	50	1.335	4.54	27.028	4.505	4.5	1.32	0.994	26.51	3.317	99.33	82.33	2771	2771	2.262	37.126	-1.726	1.103	4.921	0.877	57.2
1200S300-97	0.1017	50	1.881	6.4	37.627	6.271	4.473	1.787	0.975	37.087	5.831	174.58	136.41	8147	7411	6.484	50.853	-1.691	1.085	4.88	0.88	56.7
1200S350-541	0.0566	50	1.165	3.96	24.866	4.144	4.62	1.866	1.266	24.089	2.788	83.47	73.43	1377	1377	1.244	54.279	-2.363	1.478	5.342	0.804	71.4
1200S350-68	0.0713	50	1.46	4.97	31.004	5.167	4.609	2.306	1.257	30.917	4.062	121.6	101.62	2771	2771	2.473	67.251	-2.346	1.469	5.322	0.806	71.2
1200S350-97	0.1017	50	2.059	7	43.28	7.213	4.585	3.159	1.239	43.27	6.59	197.32	166.01	8147	7411	7.098	92.672	-2.31	1.45	5.281	0.809	70.8

SECTION PROPERTIES TABLE NOTES:

1. Calculated properties are based on AISI S100-16, North American Specification for Design of Cold-Formed Steel Structural Members.
2. The centerline bend radius is based on inside corner radii shown in thickness chart.
3. Effective properties incorporate the strength increase from the cold work of forming as applicable per AISI A3.3.2.
4. Tabulated gross properties are based on full-unreduced cross section of the studs, away from punchouts.
5. For deflection calculations, use the effective moment of inertia.
6. Allowable moment includes cold-work of forming.
7. For the steels that have both 33 and 50 ksi listing, if the design is based on 50 ksi, the 50 ksi steel needs to be specified. (ex. 3.625 S137 16-50 (50 ksi)
8. Web depth for track sections is equal to the nominal height plus 2 times the design thickness plus the bend radius. Hems on non-structural rack sections are ignored.

STRUCTURAL TRACK SECTION PROPERTIES

(T) Track Section Properties																				
			Gross Properties							Effective Properties				Torsional Properties						
Member	Design Thickness (in)	F_y (ksi)	Area (in^2)	Weight (lb/ft)	I_x (in^4)	S_x (in^3)	R_x (in)	I_y (in^4)	R_y (in)	I_x (in^4)	S_x (in^3)	M_a (in-k)	Va_g (lb)	Jx1000 (in^4)	C_w (in^6)	X_o (in)	m (in)	R_o (in)	β
250T125-33	0.0346	33	0.173	0.59	0.192	0.145	1.054	0.027	0.397	0.166	0.103	2.03	1024	0.0690	0.033	-0.760	0.456	1.358	0.687
250T125-43	0.0451	33	0.225	0.77	0.250	0.188	1.055	0.035	0.395	0.231	0.147	2.91	1356	0.1526	0.042	-0.755	0.453	1.356	0.690
250T125-54	0.0566	50	0.282	0.96	0.318	0.236	1.062	0.043	0.392	0.297	0.188	5.64	2563	0.3015	0.054	-0.749	0.449	1.357	0.696
250T125-68	0.0713	50	0.355	1.21	0.409	0.297	1.072	0.054	0.389	0.403	0.262	7.85	3199	0.6022	0.069	-0.740	0.444	1.360	0.704
250T150-33	0.0346	33	0.190	0.65	0.221	0.167	1.079	0.045	0.485	0.180	0.107	2.11	1024	0.0759	0.054	-0.973	0.573	1.532	0.596
250T150-43	0.0451	33	0.248	0.84	0.289	0.217	1.080	0.058	0.483	0.252	0.154	3.03	1356	0.1679	0.070	-0.968	0.570	1.529	0.599
250T150-54	0.0566	50	0.311	1.06	0.368	0.273	1.088	0.072	0.481	0.325	0.197	5.89	2563	0.3317	0.089	-0.961	0.566	1.530	0.605
250T150-68	0.0713	50	0.391	1.33	0.472	0.344	1.099	0.089	0.478	0.445	0.276	8.27	3199	0.6627	0.114	-0.953	0.561	1.531	0.613
250T200-33	0.0346	33	0.225	0.76	0.280	0.212	1.117	0.097	0.658	0.203	0.112	2.22	1024	0.0897	0.118	-1.418	0.813	1.922	0.455
250T200-43	0.0451	33	0.293	1.00	0.366	0.275	1.119	0.126	0.656	0.288	0.163	3.21	1356	0.1985	0.153	-1.413	0.810	1.918	0.457
250T200-54	0.0566	50	0.367	1.25	0.466	0.346	1.127	0.157	0.654	0.372	0.209	6.25	2563	0.3921	0.195	-1.405	0.806	1.917	0.462
250T200-68	0.0713	50	0.462	1.57	0.600	0.437	1.139	0.196	0.652	0.517	0.296	8.87	3199	0.7835	0.251	-1.396	0.800	1.916	0.469
350T125-33	0.0346	33	0.207	0.71	0.405	0.222	1.397	0.030	0.379	0.355	0.165	3.27	1024	0.0828	0.070	-0.668	0.414	1.594	0.824
350T125-43	0.0451	33	0.270	0.92	0.528	0.288	1.398	0.038	0.377	0.490	0.233	4.61	1739	0.1832	0.090	-0.663	0.412	1.592	0.826
350T125-54	0.0566	50	0.339	1.15	0.668	0.361	1.404	0.048	0.375	0.626	0.297	8.90	3372	0.3619	0.114	-0.658	0.408	1.595	0.830
350T125-68	0.0713	50	0.427	1.45	0.851	0.454	1.412	0.059	0.372	0.839	0.407	12.19	4536	0.7231	0.144	-0.650	0.403	1.599	0.835
350T125-97	0.1017	50	0.608	2.07	1.243	0.645	1.430	0.081	0.366	1.243	0.645	21.69	6383	2.0960	0.209	-0.636	0.394	1.607	0.844
350T150-33	0.0346	33	0.225	0.76	0.461	0.253	1.432	0.049	0.469	0.382	0.171	3.39	1024	0.0897	0.114	-0.866	0.527	1.738	0.752
350T150-43	0.0451	33	0.293	1.00	0.601	0.329	1.433	0.064	0.467	0.531	0.243	4.80	1739	0.1985	0.148	-0.861	0.525	1.736	0.754
350T150-54	0.0566	50	0.367	1.25	0.762	0.412	1.440	0.079	0.465	0.679	0.310	9.28	3372	0.3921	0.187	-0.855	0.521	1.738	0.758
350T150-68	0.0713	50	0.462	1.57	0.972	0.518	1.450	0.099	0.462	0.919	0.428	12.81	4536	0.7835	0.238	-0.847	0.516	1.742	0.763
350T150-97	0.1017	50	0.659	2.24	1.423	0.738	1.469	0.137	0.456	1.422	0.701	20.98	6383	2.2713	0.346	-0.831	0.506	1.749	0.774
350T200-33	0.0346	33	0.259	0.88	0.574	0.315	1.488	0.108	0.646	0.428	0.181	3.57	1024	0.1035	0.249	-1.285	0.761	2.069	0.614
350T200-43	0.0451	33	0.338	1.15	0.749	0.409	1.489	0.140	0.645	0.601	0.257	5.09	1739	0.2291	0.323	-1.280	0.758	2.067	0.616
350T200-54	0.0566	50	0.424	1.44	0.949	0.513	1.497	0.175	0.642	0.770	0.329	9.85	3372	0.4526	0.409	-1.273	0.754	2.067	0.621
350T200-68	0.0713	50	0.534	1.82	1.213	0.647	1.508	0.218	0.639	1.054	0.458	13.72	4536	0.9043	0.522	-1.264	0.749	2.069	0.627
350T200-97	0.1017	50	0.761	2.59	1.781	0.924	1.530	0.305	0.633	1.708	0.769	23.02	6383	2.6219	0.765	-1.247	0.738	2.073	0.638
362T125-33	0.0346	33	0.212	0.72	0.438	0.232	1.439	0.030	0.377	0.385	0.174	3.44	1024	0.0845	0.076	-0.658	0.410	1.626	0.836
362T125-43	0.0451	33	0.276	0.94	0.571	0.302	1.439	0.039	0.375	0.531	0.245	4.84	1739	0.1870	0.098	-0.654	0.407	1.625	0.838
362T125-54	0.0566	50	0.346	1.18	0.723	0.378	1.445	0.048	0.373	0.678	0.312	9.34	3372	0.3695	0.123	-0.648	0.404	1.627	0.841
362T125-68	0.0713	50	0.436	1.48	0.921	0.475	1.454	0.060	0.370	0.908	0.427	12.78	4703	0.7382	0.156	-0.641	0.399	1.631	0.846
362T125-97	0.1017	50	0.621	2.11	1.344	0.675	1.471	0.082	0.364	1.343	0.675	22.70	6574	2.1398	0.226	-0.626	0.390	1.640	0.854
362T150-33	0.0346	33	0.229	0.78	0.499	0.264	1.475	0.050	0.467	0.414	0.180	3.56	1024	0.0914	0.124	-0.854	0.522	1.768	0.766
362T150-43	0.0451	33	0.298	1.02	0.650	0.344	1.476	0.064	0.465	0.575	0.255	5.04	1739	0.2023	0.160	-0.850	0.519	1.766	0.768
362T150-54	0.0566	50	0.374	1.27	0.823	0.431	1.483	0.080	0.462	0.735	0.325	9.74	3372	0.3997	0.202	-0.844	0.516	1.768	0.772
362T150-68	0.0713	50	0.471	1.60	1.050	0.542	1.493	0.100	0.460	0.993	0.449	13.43	4703	0.7986	0.257	-0.836	0.511	1.771	0.777
362T150-97	0.1017	50	0.672	2.28	1.535	0.771	1.512	0.138	0.453	1.535	0.733	21.94	6574	2.3152	0.374	-0.820	0.501	1.779	0.787
362T200-33	0.0346	33	0.264	0.90	0.619	0.329	1.533	0.110	0.645	0.464	0.190	3.76	1024	0.1052	0.269	-1.270	0.754	2.092	0.631
362T200-43	0.0451	33	0.343	1.17	0.808	0.427	1.534	0.142	0.643	0.650	0.270	5.34	1739	0.2329	0.350	-1.265	0.752	2.090	0.633
362T200-54	0.0566	50	0.431	1.47	1.024	0.536	1.542	0.177	0.640	0.832	0.345	10.34	3372	0.4601	0.442	-1.259	0.748	2.091	0.638
362T200-68	0.0713	50	0.543	1.85	1.308	0.675	1.552	0.221	0.638	1.138	0.480	14.38	4703	0.9194	0.564	-1.250	0.743	2.093	0.643
362T200-97	0.1017	50	0.773	2.63	1.917	0.963	1.575	0.308	0.632	1.840	0.804	24.06	6574	2.6658	0.825	-1.232	0.732	2.097	0.655
400T125-33	0.0346	33	0.225	0.76	0.549	0.265	1.563	0.031	0.371	0.484	0.201	3.97	940	0.0897	0.095	-0.630	0.396	1.725	0.867
400T125-43	0.0451	33	0.293	1.00	0.716	0.344	1.564	0.040	0.369	0.666	0.282	5.57	1739	0.1985	0.122	-0.626	0.394	1.724	0.868
400T125-54	0.0566	50	0.367	1.25	0.904	0.431	1.569	0.049	0.366	0.850	0.359	10.74	3372	0.3921	0.154	-0.621	0.390	1.727	0.871
400T125-68	0.0713	50	0.462	1.57	1.151	0.541	1.577	0.061	0.364	1.134	0.488	14.62	5205	0.7835	0.194	-0.614	0.386	1.731	0.874
400T125-97	0.1017	50	0.659	2.24	1.674	0.768	1.594	0.084	0.358	1.673	0.768	25.84	7337	2.2713	0.280	-0.600	0.377	1.740	0.881
400T150-33	0.0346	33	0.242	0.82	0.622	0.300	1.603	0.051	0.460	0.519	0.208	4.12	940	0.0966	0.155	-0.821	0.507	1.859	0.805
400T150-43	0.0451	33	0.315	1.07	0.811	0.390	1.604	0.066	0.458	0.719	0.293	5.80	1739	0.2138	0.200	-0.817	0.504	1.857	0.807
400T150-54	0.0566	50	0.396	1.35	1.026	0.489	1.610	0.082	0.456	0.918	0.374	11.19	3372	0.4223	0.252	-0.811	0.501	1.860	0.810
400T150-68	0.0713	50	0.498	1.69	1.306	0.615	1.619	0.102	0.453	1.237	0.513	15.36	5205	0.8439	0.320	-0.804	0.496	1.864	0.814
400T150-97	0.1017	50	0.710	2.41	1.904	0.874	1.638	0.142	0.447	1.904	0.832	24.92	7337	2.4466	0.463	-0.788	0.487	1.872	0.823
400T200-33	0.0346	33	0.277	0.94	0.768	0.371	1.666	0.113	0.639	0.581	0.220	4.34	940	0.1104	0.336	-1.229	0.737	2.167	0.678
400T200-43	0.0451	33	0.360	1.23	1.002	0.482	1.668	0.146	0.637	0.811	0.311	6.14	1739	0.2443	0.436	-1.224	0.734	2.164	0.680
400T200-54	0.0566	50	0.452	1.54	1.268	0.604	1.675	0.182	0.635	1.037	0.397	11.88	3372	0.4828	0.551	-1.217	0.730	2.166	0.684
400T200-68	0.0713	50	0.569	1.94	1.617	0.761	1.685	0.227	0.632	1.412	0.549	16.43	5205	0.9647	0.702	-1.209	0.725	2.168	0.689
400T200-97	0.1017	50	0.811	2.76	2.364	1.085	1.707	0.318	0.626	2.269	0.911	27.29	7337	2.7973	1.022	-1.192	0.715	2.174	0.699
550T125-33	0.0346	33	0.277	0.94	1.159	0.411	2.047	0.033	0.346	1.029	0.270	5.33	680	0.1104	0.195	-0.541	0.350	2.145	0.936
550T125-43	0.0451	33	0.360	1.23	1.510	0.534	2.047	0.043	0.344	1.428	0.417	8.23	1504	0.2443	0.252	-0.537	0.348	2.144	0.937
550T125-54	0.0566	50	0.452	1.54	1.904	0.668	2.052	0.053	0.342	1.811	0.535	16.01	2980	0.4828	0.315	-0.532	0.345	2.147	0.939
550T125-68	0.0713	50	0.569	1.94	2.413	0.839	2.059	0.066	0.340	2.380	0.769	23.02	5350	0.9647	0.397	-0.526	0.341	2.152	0.940
550T125-97	0.1017	50	0.811	2.76	3.484	1.190	2.072	0.090	0.334	3.484	1.190	40.01	10197	2.7973	0.564	-0.514	0.333	2.161	0.943
550T150-33	0.0346	33	0.294	1.00	1.295	0.459	2.099	0.055	0.434	1.115	0.310	6.12	680	0.1173	0.320	-0.714	0.455	2.259	0.900
550T150-43	0.0451	33	0.383	1.30	1.688	0.596	2.100	0.072	0.432	1.516	0.468	9.25	1504	0.2596	0.414	-0.709	0.452	2.258	0.901
550T150-54	0.0566	50	0.480	1.63	2.129	0.747	2.105	0.089	0.430	1.928	0.595	17.81	2980	0.5130	0.519	-0.704	0.449	2.261	0.903
550T150-68	0.0713	50	0.605	2.06	2.700	0.939	2.113	0.111	0.427	2.569	0.804	24.07	5350	1.0251	0.655	-0.698	0.445	2.266	0.905
550T150-97	0.1017	50	0.862	2.93	3.905	1.334	2.128	0.153	0.421	3.905	1.278	38.28	10197	2.9726	0.937	-0.684	0.436	2.275	0.909
550T200-33	0.0346	33	0.329	1.12	1.567	0.555	2.184	0.123	0.613	1.246	0.307	6.06	680	0.1311	0.694	-1.088	0.674	2.516	0.813
550T200-43	0.0451	33	0.428	1.46	2.044	0.722	2.185	0.160	0.611	1.690	0.495	9.79	1504	0.2902	0.900	-1.083	0.671	2.514	0.814
550T200-54	0.0566	50	0.537	1.83	2.579	0.905	2.191	0.199	0.609	2.153	0.630	18.86	2980	0.5734	1.133	-1.077	0.668	2.517	0.817
550T200-68	0.0713	50	0.676	2.30	3.275	1.139	2.201	0.248	0.606	2.895	0.857	25.67	5350	1.1459	1.434	-1.070	0.663	2.521	0.820

SECTION PROPERTIES TABLE NOTES

1. Calculated properties are based on AISI S100-16, North American Specification for Design of Cold-Formed Steel Structural Members.
2. The centerline bend radius is based on inside corner radii shown in thickness chart.
3. Effective properties incorporate the strength increase from the cold work of forming as applicable per AISI A3.3.2.
4. Tabulated gross properties are based on full-unreduced cross section of the studs, away from punchouts.
5. For deflection calculations, use the effective moment of inertia.
6. Allowable moment includes cold-work of forming.
7. For the steels that have both 33 and 50 ksi listing, if the design is based on 50 ksi, the 50 ksi steel needs to be specified. (ex. 3.625 S137 16-50 (50 ksi)
8. Web depth for track sections is equal to the nominal height plus 2 times the design thickness plus the bend radius. Hems on non-structural rack sections are ignored.

STRUCTURAL TRACK SECTION PROPERTIES

(T) Track Section Properties																				
	Design		Gross Properties							Effective Properties				Torsional Properties						
	Thickness		Area	Weight	I_x	S_x	R_x	I_y	R_y	I_x	S_x	M_a	Va_g	Jx1000	C_w	X_o	m	R_o		
Member	(in)	F_y (ksi)	(in^2)	(lb/ft)	(in^4)	(in^3)	(in)	(in^4)	(in)	(in^4)	(in^3)	(in-k)	(lb)	(in^4)	(in^6)	(in)	(in)	(in)	β	
550T200-97	0.1017	50	0.964	3.28	4.747	1.621	2.219	0.347	0.600	4.567	1.391	41.64	10197	3.3232	2.067	-1.055	0.653	2.529	0.826	
600T125-33	0.0346	33	0.294	1.00	1.429	0.465	2.205	0.034	0.339	1.258	0.297	5.87	622	0.1173	0.238	-0.516	0.337	2.289	0.949	
600T125-43	0.0451	33	0.383	1.30	1.862	0.604	2.205	0.044	0.337	1.768	0.461	9.11	1377	0.2596	0.307	-0.513	0.335	2.289	0.950	
600T125-54	0.0566	50	0.480	1.63	2.345	0.757	2.209	0.054	0.335	2.241	0.592	17.74	2728	0.5130	0.384	-0.508	0.332	2.292	0.951	
600T125-68	0.0713	50	0.605	2.06	2.970	0.951	2.216	0.067	0.332	2.934	0.858	25.69	5350	1.0251	0.483	-0.503	0.329	2.296	0.952	
600T125-97	0.1017	50	0.862	2.93	4.282	1.348	2.229	0.092	0.327	4.281	1.347	40.33	10885	2.9726	0.685	-0.491	0.321	2.305	0.955	
600T150-33	0.0346	33	0.311	1.06	1.590	0.517	2.260	0.057	0.426	1.335	0.303	5.99	622	0.1242	0.390	-0.684	0.439	2.400	0.919	
600T150-43	0.0451	33	0.405	1.38	2.073	0.673	2.261	0.073	0.424	1.890	0.474	9.36	1377	0.2749	0.504	-0.680	0.437	2.399	0.920	
600T150-54	0.0566	50	0.509	1.73	2.612	0.843	2.266	0.091	0.422	2.400	0.609	18.24	2728	0.5432	0.632	-0.675	0.434	2.402	0.921	
600T150-68	0.0713	50	0.641	2.18	3.310	1.059	2.273	0.113	0.419	3.162	0.891	26.68	5350	1.0855	0.797	-0.669	0.430	2.406	0.923	
600T150-97	0.1017	50	0.913	3.11	4.780	1.504	2.288	0.156	0.414	4.779	1.444	43.24	10885	3.1479	1.138	-0.656	0.421	2.416	0.926	
600T200-33	0.0346	33	0.346	1.18	1.913	0.623	2.352	0.126	0.604	1.542	0.333	6.59	622	0.1380	0.847	-1.048	0.655	2.645	0.843	
600T200-43	0.0451	33	0.451	1.53	2.494	0.810	2.353	0.163	0.602	2.076	0.565	11.16	1377	0.3055	1.098	-1.044	0.652	2.644	0.844	
600T200-54	0.0566	50	0.565	1.92	3.146	1.015	2.359	0.203	0.600	2.641	0.717	21.48	2728	0.6037	1.381	-1.038	0.649	2.646	0.846	
600T200-68	0.0713	50	0.712	2.42	3.991	1.277	2.368	0.254	0.597	3.540	0.973	29.12	5350	1.2064	1.746	-1.031	0.644	2.651	0.849	
600T200-97	0.1017	50	1.015	3.45	5.774	1.817	2.385	0.355	0.591	5.559	1.568	46.95	10885	3.4985	2.510	-1.016	0.635	2.659	0.854	
800T125-33[1]	0.0346	33	0.363	1.24	2.897	0.711	2.824	0.036	0.313	2.442	0.407	8.03	465	0.1449	0.456	-0.439	0.294	2.875	0.977	
800T125-43	0.0451	33	0.473	1.61	3.774	0.925	2.824	0.046	0.311	3.484	0.640	12.65	1030	0.3208	0.589	-0.436	0.292	2.875	0.977	
800T125-54	0.0566	50	0.594	2.02	4.747	1.158	2.828	0.057	0.309	4.427	0.824	24.66	2039	0.6339	0.735	-0.432	0.289	2.877	0.977	
800T125-68	0.0713	50	0.748	2.54	6.000	1.455	2.833	0.070	0.307	5.956	1.216	36.40	4087	1.2668	0.920	-0.427	0.286	2.881	0.978	
800T125-97	0.1017	50	1.066	3.63	8.617	2.062	2.844	0.097	0.301	8.614	2.062	61.72	10885	3.6738	1.296	-0.417	0.279	2.890	0.979	
800T150-33[1]	0.0346	33	0.380	1.29	3.181	0.781	2.892	0.060	0.397	2.570	0.414	8.18	465	0.1518	0.751	-0.588	0.388	2.977	0.961	
800T150-43	0.0451	33	0.496	1.69	4.145	1.016	2.892	0.077	0.395	3.690	0.655	12.95	1030	0.3361	0.972	-0.584	0.386	2.977	0.961	
800T150-54	0.0566	50	0.622	2.12	5.216	1.272	2.896	0.096	0.393	4.693	0.844	25.27	2039	0.6641	1.215	-0.580	0.383	2.980	0.962	
800T150-68	0.0713	50	0.783	2.66	6.596	1.599	2.902	0.119	0.390	6.361	1.255	37.58	4087	1.3272	1.526	-0.575	0.379	2.984	0.963	
800T150-97	0.1017	50	1.116	3.80	9.483	2.270	2.914	0.165	0.385	9.480	2.192	65.62	10885	3.8491	2.162	-0.564	0.372	2.993	0.965	
800T200-33[1]	0.0346	33	0.415	1.41	3.750	0.921	3.006	0.135	0.571	2.789	0.424	8.37	465	0.1656	1.638	-0.917	0.589	3.194	0.918	
800T200-43	0.0451	33	0.541	1.84	4.888	1.198	3.006	0.175	0.569	4.044	0.676	13.35	1030	0.3667	2.124	-0.913	0.587	3.193	0.918	
800T200-54	0.0566	50	0.679	2.31	6.154	1.501	3.012	0.218	0.567	5.151	0.872	26.09	2039	0.7245	2.664	-0.908	0.584	3.196	0.919	
800T200-68	0.0713	50	0.854	2.91	7.789	1.888	3.019	0.272	0.564	7.053	1.310	39.22	4087	1.4480	3.357	-0.902	0.580	3.201	0.921	
800T200-97	0.1017	50	1.218	4.14	11.215	2.684	3.034	0.379	0.558	10.834	2.347	70.28	10885	4.1998	4.792	-0.889	0.571	3.211	0.923	
1000T125-43[1]	0.0451	33	0.563	1.92	6.633	1.306	3.431	0.047	0.290	5.887	0.819	16.19	822	0.3819	0.973	-0.379	0.259	3.465	0.988	
1000T125-54	0.0566	50	0.707	2.40	8.337	1.635	3.434	0.059	0.288	7.480	1.055	31.59	1628	0.7548	1.212	-0.376	0.256	3.467	0.988	
1000T125-68	0.0713	50	0.890	3.03	10.526	2.054	3.439	0.073	0.286	10.156	1.575	47.15	3261	1.5084	1.515	-0.372	0.253	3.471	0.989	
1000T125-97	0.1017	50	1.269	4.32	15.083	2.913	3.448	0.100	0.281	15.077	2.753	82.42	9507	4.3751	2.123	-0.363	0.247	3.478	0.989	
1000T150-43[1]	0.0451	33	0.586	1.99	7.210	1.419	3.508	0.080	0.370	6.197	0.837	16.54	822	0.3972	1.612	-0.513	0.345	3.565	0.979	
1000T150-54	0.0566	50	0.735	2.50	9.065	1.778	3.512	0.100	0.368	7.881	1.079	32.30	1628	0.7850	2.013	-0.509	0.342	3.567	0.980	
1000T150-68	0.0713	50	0.926	3.15	11.450	2.234	3.517	0.124	0.366	10.776	1.621	48.53	3261	1.5688	2.522	-0.505	0.339	3.572	0.980	
1000T150-97	0.1017	50	1.320	4.49	16.420	3.171	3.527	0.172	0.361	16.414	2.903	86.90	9507	4.5504	3.557	-0.495	0.332	3.580	0.981	
1000T200-43[1]	0.0451	33	0.631	2.15	8.364	1.646	3.641	0.183	0.539	6.724	0.861	17.01	822	0.4278	3.540	-0.813	0.534	3.769	0.953	
1000T200-54	0.0566	50	0.792	2.69	10.520	2.063	3.645	0.228	0.537	8.563	1.111	33.26	1628	0.8454	4.434	-0.809	0.531	3.772	0.954	
1000T200-68	0.0713	50	0.997	3.39	13.296	2.595	3.652	0.284	0.534	11.821	1.684	50.42	3261	1.6896	5.576	-0.803	0.527	3.777	0.955	
1000T200-97	0.1017	50	1.422	4.84	19.093	3.687	3.665	0.397	0.528	18.584	3.081	92.26	9507	4.9010	7.924	-0.791	0.519	3.786	0.956	
1200T125-54[1]	0.0566	50	0.820	2.79	13.341	2.187	4.034	0.060	0.271	11.463	1.286	38.51	1354	0.8756	1.820	-0.333	0.230	4.056	0.993	
1200T125-68	0.0713	50	1.033	3.51	16.834	2.749	4.037	0.074	0.268	15.689	1.934	57.90	2713	1.7501	2.270	-0.329	0.227	4.060	0.993	
1200T125-97	0.1017	50	1.472	5.01	24.090	3.899	4.045	0.102	0.264	23.752	3.443	103.07	7902	5.0763	3.171	-0.322	0.222	4.066	0.994	
1200T150-54[1]	0.0566	50	0.848	2.89	14.384	2.358	4.118	0.103	0.348	12.023	1.313	39.32	1354	0.9059	3.033	-0.454	0.310	4.157	0.988	
1200T150-68	0.0713	50	1.068	3.63	18.156	2.964	4.122	0.127	0.345	16.568	1.987	59.48	2713	1.8105	3.795	-0.450	0.307	4.161	0.988	
1200T150-97	0.1017	50	1.523	5.18	25.999	4.208	4.131	0.176	0.340	25.720	3.616	108.27	7902	5.2516	5.335	-0.441	0.301	4.169	0.989	
1200T200-54[1]	0.0566	50	0.905	3.08	16.470	2.700	4.266	0.236	0.510	12.965	1.350	40.42	1354	0.9663	6.714	-0.730	0.487	4.358	0.972	
1200T200-68	0.0713	50	1.140	3.88	20.799	3.396	4.272	0.294	0.508	18.029	2.058	61.63	2713	1.9313	8.431	-0.725	0.483	4.363	0.972	
1200T200-97	0.1017	50	1.625	5.53	29.816	4.826	4.284	0.410	0.502	28.962	3.819	114.35	7902	5.6022	11.945	-0.714	0.476	4.372	0.973	

SECTION PROPERTIES TABLE NOTES

1. Calculated properties are based on AISI S100-16, North American Specification for Design of Cold-Formed Steel Structural Members.
2. The centerline bend radius is based on inside corner radii shown in thickness chart.
3. Effective properties incorporate the strength increase from the cold work of forming as applicable per AISI A3.3.2.
4. Tabulated gross properties are based on full-unreduced cross section of the studs, away from punchouts.
5. For deflection calculations, use the effective moment of inertia.
6. Allowable moment includes cold-work of forming.
7. For the steels that have both 33 and 50 ksi listing, if the design is based on 50 ksi, the 50 ksi steel needs to be specified. (ex. 3.625 S137 16-50 (50 ksi)
8. Web depth for track sections is equal to the nominal height plus 2 times the design thickness plus the bend radius. Hems on non-structural rack sections are ignored.

STRUCTURAL TRACK SECTION PROPERTIES

	Member	Gross Properties									Effective Properties				Torsional Properties						L_u (in)
		Design Thickness (in)	F_y (ksi)	Area (in^2)	Weight (lb/ft)	I_x (in^4)	S_x (in^3)	R_x (in)	I_y (in^4)	R_y (in)	I_x (in^4)	S_x (in^3)	M_a (in-k)	M_{ad} (in-k)	J x 1000 (in^4)	C_w (in^6)	X_o (in)	m (in)	R_o (in)	β	
3-5/8" Track	362T300-33	0.0346	33	0.333	1.13	0.861	0.457	1.61	0.327	0.992	0.546	0.197	3.89	—	0.133	0.811	-2.16	1.23	2.87	0.434	—
	362T300-43	0.0451	33	0.434	1.48	1.12	0.594	1.61	0.425	0.990	0.767	0.290	5.73	—	0.294	1.05	-2.15	1.23	2.86	0.435	—
	362T300-54	0.0566	50	0.544	1.85	1.43	0.746	1.62	0.531	0.988	0.985	0.371	11.11	—	0.581	1.34	-2.15	1.23	2.86	0.439	—
	362T300-68	0.0713	50	0.685	2.33	1.82	0.941	1.63	0.665	0.985	1.36	0.519	15.55	—	1.16	1.71	-2.14	1.22	2.86	0.443	—
	362T300-97	0.1017	50	0.977	3.32	2.68	1.350	1.66	0.937	0.979	2.27	0.887	26.55	—	3.37	2.52	-2.12	1.21	2.86	0.453	—
4" Track	400T300-33	0.0346	33	0.346	1.18	1.06	0.512	1.75	0.338	0.989	0.687	0.218	4.32	—	0.138	1.01	-2.10	1.21	2.91	0.478	—
	400T300-43	0.0451	33	0.451	1.53	1.38	0.665	1.75	0.439	0.987	0.955	0.334	6.60	—	0.305	1.31	-2.10	1.21	2.91	0.479	—
	400T300-54	0.0566	50	0.565	1.92	1.75	0.835	1.76	0.548	0.985	1.22	0.427	12.77	—	0.604	1.66	-2.09	1.21	2.91	0.482	—
	400T300-68	0.0713	50	0.712	2.42	2.24	1.05	1.77	0.686	0.982	1.69	0.594	17.78	—	1.21	2.12	-2.08	1.20	2.90	0.487	—
	400T300-97	0.1017	50	1.01	3.45	3.28	1.51	1.80	0.967	0.976	2.79	1.01	30.10	—	3.50	3.11	-2.06	1.19	2.90	0.497	—
6" Track	600T300-33	0.0346	33	0.415	1.41	2.56	0.83	2.48	0.384	0.961	1.81	0.331	6.54	—	0.166	2.52	-1.85	1.11	3.24	0.674	—
	600T300-43	0.0451	33	0.541	1.84	3.34	1.08	2.48	0.498	0.960	2.45	0.556	10.98	—	0.367	3.28	-1.85	1.11	3.24	0.675	—
	600T300-54	0.0566	50	0.679	2.31	4.21	1.36	2.49	0.622	0.957	3.11	0.722	21.61	—	0.725	4.13	-1.84	1.11	3.24	0.677	—
	600T300-68	0.0713	50	0.854	2.91	5.35	1.71	2.50	0.778	0.954	4.16	1.05	31.53	—	1.45	5.24	-1.83	1.10	3.25	0.681	—
	600T300-97	0.1017	50	1.22	4.15	7.76	2.44	2.52	1.10	0.948	6.68	1.72	51.63	—	4.20	7.58	-1.82	1.09	3.25	0.688	—
8" Track	800T300-331	0.0346	33	0.484	1.65	4.89	1.20	3.18	0.416	0.927	3.46	0.443	8.76	—	0.193	4.87	-1.66	1.03	3.70	0.799	—
	800T300-43	0.0451	33	0.631	2.15	6.37	1.56	3.18	0.540	0.925	4.92	0.737	14.56	—	0.428	6.33	-1.66	1.02	3.70	0.800	—
	800T300-54	0.0566	50	0.792	2.69	8.03	1.96	3.18	0.674	0.923	6.24	0.956	28.62	—	0.845	7.96	-1.65	1.02	3.70	0.801	—
	800T300-68	0.0713	50	0.997	3.39	10.17	2.47	3.19	0.844	0.920	8.16	1.55	46.36	—	1.69	10.1	-1.64	1.02	3.71	0.803	—
	800T300-97	0.1017	50	1.42	4.84	14.7	3.51	3.21	1.19	0.914	12.8	2.59	77.44	—	4.90	14.5	-1.63	1.01	3.72	0.808	—
10" Track	1000T300-431	0.0451	33	0.721	2.45	10.7	2.10	3.85	0.572	0.890	8.56	0.919	18.16	—	0.489	10.6	-1.50	0.950	4.23	0.873	—
	1000T300-54	0.0566	50	0.905	3.08	13.4	2.63	3.85	0.714	0.888	10.8	1.19	35.66	—	0.966	13.3	-1.50	0.947	4.23	0.874	—
	1000T300-68	0.0713	50	1.14	3.88	17.0	3.32	3.86	0.893	0.885	14.1	1.90	57.02	—	1.93	16.8	-1.49	0.943	4.23	0.876	—
	1000T300-97	0.1017	50	1.62	5.53	24.4	4.72	3.88	1.26	0.879	21.5	3.59	107.46	—	5.60	24.0	-1.48	0.934	4.24	0.879	—
12" Track	1200T300-541	0.0566	50	1.02	3.46	20.6	3.38	4.50	0.745	0.855	14.5	1.39	41.65	—	1.09	20.2	-1.37	0.884	4.79	0.917	—
	1200T300-68	0.0713	50	1.28	4.36	26.1	4.26	4.51	0.932	0.852	20.3	2.14	64.06	—	2.17	25.5	-1.37	0.880	4.79	0.918	—
	1200T300-97	0.1017	50	1.83	6.22	37.5	6.06	4.53	1.31	0.847	33.4	4.05	121.31	—	6.30	36.4	-1.36	0.871	4.80	0.920	—

SECTION PROPERTIES TABLE NOTES

1. Calculated properties are based on AISI S100-16, North American Specification for Design of Cold-Formed Steel Structural Members.
2. The centerline bend radius is based on inside corner radii shown in thickness chart.
3. Effective properties incorporate the strength increase from the cold work of forming as applicable per AISI A3.3.2.
4. Tabulated gross properties are based on full-unreduced cross section of the studs, away from punchouts.
5. For deflection calculations, use the effective moment of inertia.
6. Allowable moment includes cold-work of forming.
7. For the steels that have both 33 and 50 ksi listing, if the design is based on 50 ksi, the 50 ksi steel needs to be specified. (ex. 3.625 S137 16-50 (50 ksi)
8. Web depth for track sections is equal to the nominal height plus 2 times the design thickness plus the bend radius. Hems on non-structural rack sections are ignored.

LIMITING WALL HEIGHTS - CURTAIN WALL (5-25 psf)

Stud Member	Spacing, in, oc	Fy, ksi	5 psf			15 psf			20 psf			25 psf		
			L/120	L/240	L/360	L/240	L/360	L/600	L/240	L/360	L/600	L/240	L/360	L/600
250S162-33	12	33	18'4"	14'7"	12'9"	11'4"	9'11"	8'5"	10'4"	9'0"	7'7"	9'7"	8'5"	7'1"
250S162-33	16	33	16'8"	13'3"	11'7"	10'4"	9'0"	7'7"	9'5"	8'2"	6'11"	8'5"	7'7"	6'5"
250S162-33	24	33	14'7"	11'7"	10'1"	8'11"	7'11"	6'8"	7'8"	7'2"	6'0"	6'11"	6'8"	5'7"
250S162-43	12	33	19'11"	15'10"	13'10"	12'4"	10'10"	9'1"	11'3"	9'10"	8'3"	10'5"	9'1"	7'8"
250S162-43	16	33	18'1"	14'4"	12'7"	11'3"	9'10"	8'3"	10'2"	8'11"	7'6"	9'6"	8'3"	7'0"
250S162-43	24	33	15'10"	12'7"	11'0"	9'10"	8'7"	7'3"	8'11"	7'9"	6'7"	8'3"	7'3"	6'1"
250S162-54	12	50	21'4"	16'11"	14'9"	13'3"	11'7"	9'9"	12'0"	10'6"	8'10"	11'2"	9'9"	8'3"
250S162-54	16	50	19'4"	15'5"	13'5"	12'0"	10'6"	8'10"	10'11"	9'6"	8'0"	10'2"	8'10"	7'6"
250S162-54	24	50	16'11"	13'5"	11'9"	10'6"	9'2"	7'9"	9'6"	8'4"	7'0"	8'10"	7'9"	6'6"
250S162-68	12	50	22'9"	18'1"	15'9"	14'1"	12'4"	10'5"	12'10"	11'2"	9'5"	11'11"	10'5"	8'9"
250S162-68	16	50	20'8"	16'5"	14'4"	12'10"	11'2"	9'5"	11'8"	10'2"	8'7"	10'10"	9'5"	8'0"
250S162-68	24	50	18'1"	14'4"	12'6"	11'2"	9'9"	8'3"	10'2"	8'11"	7'6"	9'5"	8'3"	7'0"
362S162-33	12	33	24'4"	19'4"	16'11"	15'1"	13'2"	11'1"	13'3"	12'0"	10'1"	11'11"	11'1"	9'5"
362S162-33	16	33	22'2"	17'7"	15'4"	13'3"	12'0"	10'1"	11'6"	10'11"	9'2"	10'3"e	10'1"e	8'6"
362S162-33	24	33	18'9"	15'4"	13'5"	10'10"	10'6"	8'10"	9'5"e	9'5"e	8'0"	8'5"e	8'5"e	7'5"e
362S162-43	12	33	26'6"	21'0"	18'5"	16'5"	14'4"	12'1"	14'11"	13'0"	11'0"	13'10"	12'1"	10'2"
362S162-43	16	33	24'1"	19'1"	16'8"	14'11"	13'0"	11'0"	13'7"	11'10"	10'0"	12'1"	11'0"	9'3"
362S162-43	24	33	21'0"	16'8"	14'7"	12'9"	11'5"	9'7"	11'1"	10'4"	8'9"	9'11"	9'7"	8'1"
362S162-54	12	50	28'5"	22'6"	19'8"	17'7"	15'4"	13'0"	16'0"	14'0"	11'9"	14'10"	13'0"	10'11"
362S162-54	16	50	25'10"	20'6"	17'11"	16'0"	14'0"	11'9"	14'6"	12'8"	10'8"	13'6"	11'9"	9'11"
362S162-54	24	50	22'6"	17'11"	15'7"	14'0"	12'2"	10'3"	12'8"	11'1"	9'4"	11'9"	10'3"	8'8"
362S162-68	12	50	30'5"	24'1"	21'1"	18'10"	16'5"	13'10"	17'1"	14'11"	12'7"	15'11"	13'10"	11'8"
362S162-68	16	50	27'7"	21'11"	19'2"	17'1"	14'11"	12'7"	15'6"	13'7"	11'5"	14'5"	12'7"	10'8"
362S162-68	24	50	24'1"	19'2"	16'9"	14'11"	13'1"	11'0"	13'7"	11'10"	10'0"	12'7"	11'0"	9'3"
362S162-97	12	50	33'6"	26'7"	23'3"	20'9"	18'2"	15'4"	18'10"	16'6"	13'11"	17'6"	15'4"	12'11"
362S162-97	16	50	30'5"	24'2"	21'1"	18'10"	16'6"	13'11"	17'2"	15'0"	12'8"	15'11"	13'11"	11'9"
362S162-97	24	50	26'7"	21'1"	18'5"	16'6"	14'5"	12'2"	15'0"	13'1"	11'0"	13'11"	12'2"	10'3"
362S200-33	12	33	25'8"	20'4"	17'9"	15'11"	13'11"	11'8"	13'11"	12'7"	10'8"	12'5"	11'8"	9'10"
362S200-33	16	33	23'3"	18'6"	16'2"	13'11"	12'7"	10'8"	12'1"	11'5"	9'8"	10'9"e	10'8"e	9'0"
362S200-33	24	33	19'8"	16'2"	14'1"	11'4"e	11'0"e	9'3"	9'10"e	9'10"e	8'5"e	8'10"e	8'10"e	7'10"e
362S200-43	12	33	28'0"	22'3"	19'5"	17'4"	15'2"	12'9"	15'9"	13'9"	11'7"	14'8"	12'9"	10'9"
362S200-43	16	33	25'5"	20'2"	17'8"	15'9"	13'9"	11'7"	14'4"	12'6"	10'7"	13'0"	11'7"	9'10"
362S200-43	24	33	22'3"	17'8"	15'5"	13'8"	12'0"	10'2"	11'10"	10'11"	9'3"	10'7"	10'2"	8'7"
362S200-54	12	50	30'0"	23'10"	20'10"	18'7"	16'3"	13'8"	16'11"	14'9"	12'5"	15'8"	13'8"	11'7"
362S200-54	16	50	27'3"	21'8"	18'11"	16'11"	14'9"	12'5"	15'4"	13'5"	11'4"	14'3"	12'5"	10'6"
362S200-54	24	50	23'10"	18'11"	16'6"	14'9"	12'11"	10'11"	13'5"	11'9"	9'11"	12'5"	10'11"	9'2"
362S200-68	12	50	32'2"	25'6"	22'3"	19'11"	17'5"	14'8"	18'1"	15'10"	13'4"	16'10"	14'8"	12'5"
362S200-68	16	50	29'2"	23'2"	20'3"	18'1"	15'10"	13'4"	16'5"	14'4"	12'1"	15'3"	13'4"	11'3"
362S200-68	24	50	25'6"	20'3"	17'8"	15'10"	13'10"	11'8"	14'4"	12'7"	10'7"	13'4"	11'8"	9'10"
362S200-97	12	50	35'6"	28'3"	24'8"	22'0"	19'3"	16'3"	20'0"	17'6"	14'9"	18'7"	16'3"	13'8"
362S200-97	16	50	32'3"	25'8"	22'5"	20'0"	17'6"	14'9"	18'2"	15'11"	13'5"	16'11"	14'9"	12'5"
362S200-97	24	50	28'3"	22'5"	19'7"	17'6"	15'3"	12'11"	15'11"	13'11"	11'8"	14'9"	12'11"	10'10"
400S162-33	12	33	26'3"	20'10"	18'3"	16'2"	14'3"	12'0"	14'0"	12'11"	10'11"	12'7"	12'0"	10'1"
400S162-33	16	33	23'11"	18'11"	16'7"	14'0"	12'11"	10'11"	12'2"	11'9"	9'11"	10'10"e	10'10"e	9'2"

SECTION PROPERTIES TABLE NOTES

1. Lateral loads have not been modified for strength checks: full loads are applied.
2. Calculated properties are based on AISI S100-16, North American Specification for Cold-Formed Steel Structural Members.
3. The 5 psf live load has not been reduced for deflection checks. For 15 psf or higher wind pressure, read the note below.

   IBC 2012/ASCE 7-10: Due to the change in the model building codes, design wind pressures determined using IBC 2012/ASCE 7-10 are strength level loads (LRFD) in comparison to those determined in earlier IBC codes which were service level loads (ASD). The load/span tables that follow are based on service level (ASD) wind loads. Therefore, to properly use the load/span tables in this catalog, multiply the IBC 2012/ASCE 7-10 design wind pressures by 0.6 (Reference section 2.4 ASCE 7-10) prior to entering the load/span tables.

   - Example:
     * ASCE 7-10 Calculated Design Wind Pressure = 25 psf (Strength level loads, LRFD)
     * Convert to service level loads (ASD) = 25 psf x 0.6 = 15 psf
     * Use 10 pfs as the Pressure Value used in this Table to determine the member span

   Any other Building Code: The load/span tables that follow are based on service level (ASD) wind loads. If the wind load being used meets this criterion, it does not need to be modified prior to using the tables.

4. 15 psf and higher wind pressures have been multiplied by 0.7 for deflection determination, in accordance with footnote f of IBC table 1604.3. The 5 psf live load has not been reduced for deflection checks.
5. Limiting heights are based on continuous support of each flange over the full length of the stud.
6. Limiting heights are based on steel properties alone (non-composite).
7. Web crippling checks are based on end-one flange loading condition using 1-inch end bearing.
8. End shear and web crippling capacity have not been reduced for punchouts. Punchouts are assumed to be atleast 10-inchs from the end of members, in accor dance with ASTM C955, section 4.6.
9. Where limiting heights are followed by "e", web stiffeners are required.

LIMITING WALL HEIGHTS - CURTAIN WALL (5-25 psf)

Stud Member	Spacing, in, oc	Fy, ksi	5 psf			15 psf			20 psf			25 psf		
			L/120	L/240	L/360	L/240	L/360	L/600	L/240	L/360	L/600	L/240	L/360	L/600
400S162-33	24	33	19'10"	16'7"	14'6"	11'5"e	11'4"e	9'6"	9'11"e	9'11"e	8'8"e	8'10"e	8'10"e	8'0"e
400S162-43	12	33	28'7"	22'8"	19'10"	17'9"	15'6"	13'1"	16'1"	14'1"	11'10"	14'10"	13'1"	11'0"
400S162-43	16	33	26'0"	20'7"	18'0"	16'1"	14'1"	11'10"	14'4"	12'9"	10'9"	12'10"	11'10"	10'0"
400S162-43	24	33	22'8"	18'0"	15'9"	13'6"	12'3"	10'4"	11'9"	11'2"	9'5"	10'6"	10'4"	8'9"
400S162-54	12	50	30'8"	24'4"	21'3"	19'0"	16'7"	14'0"	17'3"	15'1"	12'9"	16'0"	14'0"	11'10"
400S162-54	16	50	27'10"	22'1"	19'4"	17'3"	15'1"	12'9"	15'8"	13'8"	11'7"	14'7"	12'9"	10'9"
400S162-54	24	50	24'4"	19'4"	16'10"	15'1"	13'2"	11'1"	13'8"	12'0"	10'1"	12'9"	11'1"	9'4"
400S162-68	12	50	32'10"	26'0"	22'9"	20'4"	17'9"	15'0"	18'6"	16'2"	13'7"	17'2"	15'0"	12'8"
400S162-68	16	50	29'10"	23'8"	20'8"	18'6"	16'2"	13'7"	16'9"	14'8"	12'4"	15'7"	13'7"	11'6"
400S162-68	24	50	26'0"	20'8"	18'1"	16'2"	14'1"	11'11"	14'8"	12'10"	10'10"	13'7"	11'11"	10'0"
400S162-97	12	50	36'3"	28'9"	25'1"	22'5"	19'7"	16'7"	20'5"	17'10"	15'0"	18'11"	16'7"	13'11"
400S162-97	16	50	32'11"	26'1"	22'10"	20'5"	17'10"	15'0"	18'6"	16'2"	13'8"	17'2"	15'0"	12'8"
400S162-97	24	50	28'9"	22'10"	19'11"	17'10"	15'7"	13'2"	16'2"	14'2"	11'11"	15'0"	13'2"	11'1"
400S200-33	12	33	27'8"	21'11"	19'2"	17'0"	15'0"	12'7"	14'9"	13'7"	11'6"	13'2"e	12'7"	10'8"
400S200-33	16	33	25'1"	19'11"	17'5"	14'9"	13'7"	11'6"	12'9"e	12'4"e	10'5"	11'5"e	11'5"e	9'8"
400S200-33	24	33	20'10"	17'5"	15'2"	12'0"e	11'10"e	10'0"	10'5"e	10'5"e	9'1"e	9'4"e	9'4"e	8'5"e
400S200-43	12	33	30'2"	23'11"	20'11"	18'8"	16'4"	13'9"	17'0"	14'10"	12'6"	15'9"	13'9"	11'7"
400S200-43	16	33	27'5"	21'9"	19'0"	17'0"	14'10"	12'6"	15'4"	13'6"	11'4"	13'9"	12'6"	10'7"
400S200-43	24	33	23'11"	19'0"	16'7"	14'6"	13'0"	10'11"	12'7"	11'9"	9'11"	11'3"e	10'11"	9'3"
400S200-54	12	50	32'4"	25'8"	22'5"	20'1"	17'6"	14'9"	18'3"	15'11"	13'5"	16'11"	14'9"	12'6"
400S200-54	16	50	29'5"	23'4"	20'5"	18'3"	15'11"	13'5"	16'7"	14'6"	12'2"	15'4"	13'5"	11'4"
400S200-54	24	50	25'8"	20'5"	17'10"	15'11"	13'11"	11'9"	14'6"	12'8"	10'8"	13'5"	11'9"	9'11"
400S200-68	12	50	34'8"	27'6"	24'0"	21'6"	18'9"	15'10"	19'6"	17'1"	14'5"	18'1"	15'10"	13'4"
400S200-68	16	50	31'6"	25'0"	21'10"	19'6"	17'1"	14'5"	17'9"	15'6"	13'1"	16'6"	14'5"	12'2"
400S200-68	24	50	27'6"	21'10"	19'1"	17'1"	14'11"	12'7"	15'6"	13'6"	11'5"	14'5"	12'7"	10'7"
400S200-97	12	50	38'5"	30'6"	26'7"	23'9"	20'9"	17'6"	21'7"	18'11"	15'11"	20'1"	17'6"	14'9"
400S200-97	16	50	34'10"	27'8"	24'2"	21'7"	18'11"	15'11"	19'8"	17'2"	14'6"	18'3"	15'11"	13'5"
400S200-97	24	50	30'6"	24'2"	21'1"	18'11"	16'6"	13'11"	17'2"	15'0"	12'8"	15'11"	13'11"	11'9"
600S162-33	12	33	35'6"	28'8"	25'0"	20'6"e	19'6"	16'6"	17'9"e	17'9"e	15'0"	15'11"e	15'11"e	13'11"e
600S162-33	16	33	30'9"	26'0"	22'9"	17'9"e	17'9"e	15'0"	15'5"e	15'5"e	13'7"e	13'9"e	13'9"e	12'8"e
600S162-33	24	33	25'2"	22'9"	19'10"	14'6"e	14'6"e	13'1"e	12'7"e	12'7"e	11'11"e	11'3"e	11'3"e	11'0"e
600S162-43	12	33	39'4"	31'2"	27'3"	24'4"	21'3"	17'11"	22'0"	19'4"	16'4"	19'8"	17'11"	15'2"
600S162-43	16	33	35'9"	28'4"	24'9"	22'0"	19'4"	16'4"	19'0"	17'7"	14'10"	17'0"e	16'4"e	13'9"
600S162-43	24	33	31'1"	24'9"	21'8"	17'11"e	16'11"	14'3"	15'6"e	15'4"e	12'11"	13'11"e	13'11"e	12'0"e
600S162-54	12	50	42'2"	33'6"	29'3"	26'2"	22'10"	19'3"	23'9"	20'9"	17'6"	22'1"	19'3"	16'3"
600S162-54	16	50	38'4"	30'5"	26'7"	23'9"	20'9"	17'6"	21'7"	18'10"	15'11"	20'0"	17'6"	14'9"
600S162-54	24	50	33'6"	26'7"	23'3"	20'9"	18'1"	15'3"	18'10"	16'6"	13'11"	17'6"	15'3"	12'11"
600S162-68	12	50	45'3"	35'11"	31'4"	28'0"	24'6"	20'8"	25'6"	22'3"	18'9"	23'8"	20'8"	17'5"
600S162-68	16	50	41'1"	32'7"	28'6"	25'6"	22'3"	18'9"	23'2"	20'3"	17'1"	21'6"	18'9"	15'10"
600S162-68	24	50	35'11"	28'6"	24'11"	22'3"	19'5"	16'5"	20'3"	17'8"	14'11"	18'9"	16'5"	13'10"
600S162-97	12	50	50'1"	39'9"	34'9"	31'1"	27'2"	22'11"	28'3"	24'8"	20'9"	26'2"	22'11"	19'4"
600S162-97	16	50	45'6"	36'2"	31'7"	28'3"	24'8"	20'9"	25'8"	22'5"	18'11"	23'10"	20'9"	17'6"
600S162-97	24	50	39'9"	31'7"	27'7"	24'8"	21'6"	18'2"	22'5"	19'7"	16'6"	20'9"	18'2"	15'4"
600S162-118	12	50	52'11"	42'0"	36'8"	32'10"	28'8"	24'2"	29'10"	26'0"	22'0"	27'8"	24'2"	20'5"
600S162-118	16	50	48'1"	38'2"	33'4"	29'10"	26'0"	22'0"	27'1"	23'8"	19'11"	25'2"	22'0"	18'6"
600S162-118	24	50	42'0"	33'4"	29'2"	26'0"	22'9"	19'2"	23'8"	20'8"	17'5"	22'0"	19'2"	16'2"
600S200-33	12	33	37'9"	30'0"	26'2"	21'11"e	20'6"e	17'3"	18'11"e	18'7"e	15'8"e	16'11"e	16'11"e	14'7"e
600S200-33	16	33	32'10"	27'3"	23'10"	18'11"e	18'7"e	15'8"e	16'5"e	16'5"e	14'3"e	14'8"e	14'8"e	13'3"e
600S200-33	24	33	26'10"	23'10"	20'10"	15'6"e	15'6"e	13'8"e	13'5"e	13'5"e	12'5"e	12'0"e	12'0"e	11'7"e
600S200-43	12	33	41'3"	32'9"	28'7"	25'7"	22'4"	18'10"	22'8"	20'4"	17'2"	20'3"	18'10"	15'11"

SECTION PROPERTIES TABLE NOTES

1. Lateral loads have not been modified for strength checks: full loads are applied.
2. Calculated properties are based on AISI S100-16, North American Specification for Cold-Formed Steel Structural Members.
3. The 5 psf live load has not been reduced for deflection checks. For 15 psf or higher wind pressure, read the note below.

   IBC 2012/ASCE 7-10: Due to the change in the model building codes, design wind pressures determined using IBC 2012/ASCE 7-10 are strength level loads (LRFD) in comparison to those determined in earlier IBC codes which were service level loads (ASD). The load/span tables that follow are based on service level (ASD) wind loads. Therefore, to properly use the load/span tables in this catalog, multiply the IBC 2012/ASCE 7-10 design wind pressures by 0.6 (Reference section 2.4 ASCE 7-10) prior to entering the load/span tables.

   - Example:
     * ASCE 7-10 Calculated Design Wind Pressure = 25 psf (Strength level loads, LRFD)
     * Convert to service level loads (ASD) = 25 psf x 0.6 = 15 psf
     * Use 10 pfs as the Pressure Value used in this Table to determine the member span

   Any other Building Code: The load/span tables that follow are based on service level (ASD) wind loads. If the wind load being used meets this criterion, it does not need to be modified prior to using the tables.

4. 15 psf and higher wind pressures have been multiplied by 0.7 for deflection determination, in accordance with footnote f of IBC table 1604.3. The 5 psf live load has not been reduced for deflection checks.
5. Limiting heights are based on continuous support of each flange over the full length of the stud.
6. Limiting heights are based on steel properties alone (non-composite).
7. Web crippling checks are based on end-one flange loading condition using 1-inch end bearing.
8. End shear and web crippling capacity have not been reduced for punchouts. Punchouts are assumed to be atleast 10-inchs from the end of members, in accor dance with ASTM C955, section 4.6.
9. Where limiting heights are followed by "e", web stiffeners are required.

LIMITING WALL HEIGHTS - CURTAIN WALL (5-25 psf)

Stud Member	Spacing, in, oc	Fy, ksi	5 psf			15 psf			20 psf			25 psf		
			L/120	L/240	L/360	L/240	L/360	L/600	L/240	L/360	L/600	L/240	L/360	L/600
600S200-43	16	33	37'6"	29'9"	26'0"	22'8"	20'4"	17'2"	19'7"e	18'5"	15'7"	17'7"e	17'2"e	14'5"
600S200-43	24	33	32'0"	26'0"	22'9"	18'6"e	17'9"e	15'0"	16'0"e	16'0"e	13'7"e	14'4"e	14'4"e	12'7"e
600S200-54	12	50	44'4"	35'2"	30'9"	27'6"	24'0"	20'3"	24'11"	21'10"	18'5"	23'2"	20'3"	17'1"
600S200-54	16	50	40'3"	32'0"	27'11"	24'11"	21'10"	18'5"	22'8"	19'10"	16'8"	21'1"	18'5"	15'6"
600S200-54	24	50	35'2"	27'11"	24'5"	21'10"	19'1"	16'1"	19'10"	17'4"	14'7"	18'5"	16'1"	13'7"
600S200-68	12	50	47'7"	37'9"	33'0"	29'6"	25'9"	21'9"	26'9"	23'5"	19'9"	24'10"	21'9"	18'4"
600S200-68	16	50	43'2"	34'4"	29'11"	26'9"	23'5"	19'9"	24'4"	21'3"	17'11"	22'7"	19'9"	16'8"
600S200-68	24	50	37'9"	29'11"	26'2"	23'5"	20'5"	17'3"	21'3"	18'7"	15'8"	19'9"	17'3"	14'6"
600S200-97	12	50	52'10"	41'11"	36'7"	32'9"	28'7"	24'1"	29'9"	26'0"	21'11"	27'7"	24'1"	20'4"
600S200-97	16	50	48'0"	38'1"	33'3"	29'9"	26'0"	21'11"	27'0"	23'7"	19'11"	25'1"	21'11"	18'6"
600S200-97	24	50	41'11"	33'3"	29'1"	26'0"	22'8"	19'2"	23'7"	20'7"	17'5"	21'11"	19'2"	16'2"
800S162-33	12	33	41'0"	35'5"	30'11"	23'8"e	23'8"e	20'4"e	20'6"e	20'6"e	18'6"e	18'4"e	18'4"e	17'2"e
800S162-33	16	33	35'6"	32'2"	28'1"	20'6"e	20'6"e	18'6"e	17'9"e	17'9"e	16'10"e	15'11"e	15'11"e	15'7"e
800S162-33	24	33	29'0"e	28'1"	24'7"	16'9"e	16'9"e	16'2"e	14'6"e	14'6"e	14'6"e	13'0"e	13'0"e	13'0"e
800S162-43	12	33	49'1"	38'11"	34'0"	28'7"	26'7"	22'5"	24'9"e	24'2"	20'4"	22'1"e	22'1"e	18'11"
800S162-43	16	33	42'10"	35'4"	30'11"	24'9"e	24'2"	20'4"	21'5"e	21'5"e	18'6"	19'2"e	19'2"e	17'2"e
800S162-43	24	33	35'0"	30'11"	27'0"	20'2"e	20'2"e	17'9"e	17'6"e	17'6"e	16'2"e	15'8"e	15'8"e	15'0"e
800S162-54	12	50	52'9"	41'10"	36'7"	32'8"	28'7"	24'1"	29'9"	25'11"	21'11"	27'7"	24'1"	20'4"
800S162-54	16	50	47'11"	38'1"	33'3"	29'9"	25'11"	21'11"	27'0"	23'7"	19'11"	25'1"	21'11"	18'6"
800S162-54	24	50	41'10"	33'3"	29'0"	25'11"	22'8"	19'1"	23'5"	20'7"	17'4"	20'11"	19'1"	16'2"
800S162-68	12	50	57'0"	45'3"	39'6"	35'4"	30'10"	26'0"	32'1"	28'1"	23'8"	29'10"	26'0"	22'0"
800S162-68	16	50	51'10"	41'1"	35'11"	32'1"	28'1"	23'8"	29'2"	25'6"	21'6"	27'1"	23'8"	19'11"
800S162-68	24	50	45'3"	35'11"	31'5"	28'1"	24'6"	20'8"	25'6"	22'3"	18'9"	23'8"	20'8"	17'5"
800S162-97	12	50	63'5"	50'4"	43'11"	39'3"	34'4"	28'11"	35'8"	31'2"	26'4"	33'2"	28'11"	24'5"
800S162-97	16	50	57'7"	45'9"	39'11"	35'8"	31'2"	26'4"	32'5"	28'4"	23'11"	30'1"	26'4"	22'2"
800S162-97	24	50	50'4"	39'11"	34'11"	31'2"	27'3"	23'0"	28'4"	24'9"	20'11"	26'4"	23'0"	19'5"
800S162-118	12	50	67'1"	53'3"	46'6"	41'7"	36'4"	30'8"	37'9"	33'0"	27'10"	35'1"	30'8"	25'10"
800S162-118	16	50	60'11"	48'4"	42'3"	37'9"	33'0"	27'10"	34'4"	30'0"	25'3"	31'10"	27'10"	23'6"
800S162-118	24	50	53'3"	42'3"	36'11"	33'0"	28'10"	24'4"	30'0"	26'2"	22'1"	27'10"	24'4"	20'6"
800S200-33	12	33	44'0"	37'9"	33'0"	25'5"e	25'5"e	21'8"e	22'0"e	22'0"e	19'9"e	19'8"e	19'8"e	18'4"e
800S200-33	16	33	38'1"	34'3"	29'11"	22'0"e	22'0"e	19'9"e	19'1"e	19'1"e	17'11"e	17'1"e	17'1"e	16'8"e
800S200-33	24	33	31'1"e	29'11"e	26'2"	18'0"e	18'0"e	17'3"e	15'7"e	15'7"e	15'7"e	13'11"e	13'11"e	13'11"e
800S200-43	12	33	51'10"	41'1"	35'11"	30'7"	28'1"	23'8"	26'5"e	25'6"e	21'6"	23'8"e	23'8"e	19'11"e
800S200-43	16	33	45'10"	37'4"	32'8"	26'5"e	25'6"e	21'6"	22'11"e	22'11"e	19'6"e	20'6"e	20'6"e	18'2"e
800S200-43	24	33	37'5"	32'8"	28'6"	21'7"e	21'7"e	18'9"e	18'8"e	18'8"e	17'1"e	16'9"e	16'9"e	15'10"e
800S200-54	12	50	55'8"	44'2"	38'7"	34'6"	30'2"	25'5"	31'4"	27'5"	23'1"	29'1"	25'5"	21'5"
800S200-54	16	50	50'7"	40'2"	35'1"	31'4"	27'5"	23'1"	28'6"	24'10"	21'0"	26'5"	23'1"	19'6"
800S200-54	24	50	44'2"	35'1"	30'8"	27'5"	23'11"	20'2"	24'10"	21'9"	18'4"	22'4"	20'2"	17'0"
800S200-68	12	50	59'9"	47'5"	41'5"	37'1"	32'4"	27'4"	33'8"	29'5"	24'10"	31'3"	27'4"	23'0"
800S200-68	16	50	54'4"	43'1"	37'8"	33'8"	29'5"	24'10"	30'7"	26'9"	22'6"	28'5"	24'10"	20'11"
800S200-68	24	50	47'5"	37'8"	32'11"	29'5"	25'8"	21'8"	26'9"	23'4"	19'8"	24'10"	21'8"	18'3"
800S200-97	12	50	66'6"	52'9"	46'1"	41'2"	36'0"	30'4"	37'5"	32'8"	27'7"	34'9"	30'4"	25'7"
800S200-97	16	50	60'5"	47'11"	41'11"	37'5"	32'8"	27'7"	34'0"	29'9"	25'1"	31'7"	27'7"	23'3"
800S200-97	24	50	52'9"	41'11"	36'7"	32'8"	28'7"	24'1"	29'9"	25'11"	21'11"	27'7"	24'1"	20'4"

SECTION PROPERTIES TABLE NOTES

1. Lateral loads have not been modified for strength checks: full loads are applied.
2. Calculated properties are based on AISI S100-16, North American Specification for Cold-Formed Steel Structural Members.
3. The 5 psf live load has not been reduced for deflection checks. For 15 psf or higher wind pressure, read the note below.

   IBC 2012/ASCE 7-10: Due to the change in the model building codes, design wind pressures determined using IBC 2012/ASCE 7-10 are strength level loads (LRFD) in comparison to those determined in earlier IBC codes which were service level loads (ASD). The load/span tables that follow are based on service level (ASD) wind loads. Therefore, to properly use the load/span tables in this catalog, multiply the IBC 2012/ASCE 7-10 design wind pressures by 0.6 (Reference section 2.4 ASCE 7-10) prior to entering the load/span tables.

   - Example:
     * ASCE 7-10 Calculated Design Wind Pressure = 25 psf (Strength level loads, LRFD)
     * Convert to service level loads (ASD) = 25 psf x 0.6 = 15 psf
     * Use 10 pfs as the Pressure Value used in this Table to determine the member span

   Any other Building Code: The load/span tables that follow are based on service level (ASD) wind loads. If the wind load being used meets this criterion, it does not need to be modified prior to using the tables.

4. 15 psf and higher wind pressures have been multiplied by 0.7 for deflection determination, in accordance with footnote f of IBC table 1604.3. The 5 psf live load has not been reduced for deflection checks.
5. Limiting heights are based on continuous support of each flange over the full length of the stud.
6. Limiting heights are based on steel properties alone (non-composite).
7. Web crippling checks are based on end-one flange loading condition using 1-inch end bearing.
8. End shear and web crippling capacity have not been reduced for punchouts. Punchouts are assumed to be atleast 10-inchs from the end of members, in accor dance with ASTM C955, section 4.6.
9. Where limiting heights are followed by "e", web stiffeners are required.

LIMITING WALL HEIGHTS - CURTAIN WALL (15-25 psf)

Stud Member	Spacing, in, oc	Fy, ksi	15 psf			20 psf			25 psf		
			L/240	L/360	L/600	L/240	L/360	L/600	L/240	L/360	L/600
362S200-54	12	33	18' 7"	16' 3"	13' 8"	16' 11"	14' 9"	12' 5"	15' 8"	13' 8"	11' 7"
362S200-54	16	33	16' 11"	14' 9"	12' 5"	15' 4"	13' 5"	11' 4"	14' 3"	12' 5"	10' 6"
362S200-54	24	33	14' 9"	12' 11"	10' 11"	13' 5"	11' 9"	9' 11"	12' 1"	10' 11"	9' 2"
362S200-54	12	50	18' 7"	16' 3"	13' 8"	16' 11"	14' 9"	12' 5"	15' 8"	13' 8"	11' 7"
362S200-54	16	50	16' 11"	14' 9"	12' 5"	15' 4"	13' 5"	11' 4"	14' 3"	12' 5"	10' 6"
362S200-54	24	50	14' 9"	12' 11"	10' 11"	13' 5"	11' 9"	9' 11"	12' 5"	10' 11"	9' 2"
362S200-68	12	33	19' 11"	17' 5"	14' 8"	18' 1"	15' 10"	13' 4"	16' 10"	14' 8"	12' 5"
362S200-68	16	33	18' 1"	15' 10"	13' 4"	16' 5"	14' 4"	12' 1"	15' 3"	13' 4"	11' 3"
362S200-68	24	33	15' 10"	13' 10"	11' 8"	14' 4"	12' 7"	10' 7"	13' 4"	11' 8"	9' 10"
362S200-68	12	50	19' 11"	17' 5"	14' 8"	18' 1"	15' 10"	13' 4"	16' 10"	14' 8"	12' 5"
362S200-68	16	50	18' 1"	15' 10"	13' 4"	16' 5"	14' 4"	12' 1"	15' 3"	13' 4"	11' 3"
362S200-68	24	50	15' 10"	13' 10"	11' 8"	14' 4"	12' 7"	10' 7"	13' 4"	11' 8"	9' 10"
362S200-97	12	33	22' 0"	19' 3"	16' 3"	20' 0"	17' 6"	14' 9"	18' 7"	16' 3"	13' 8"
362S200-97	16	33	20' 0"	17' 6"	14' 9"	18' 2"	15' 11"	13' 5"	16' 11"	14' 9"	12' 5"
362S200-97	24	33	17' 6"	15' 3"	12' 11"	15' 11"	13' 11"	11' 8"	14' 9"	12' 11"	10' 10"
362S200-97	12	50	22' 0"	19' 3"	16' 3"	20' 0"	17' 6"	14' 9"	18' 7"	16' 3"	13' 8"
362S200-97	16	50	20' 0"	17' 6"	14' 9"	18' 2"	15' 11"	13' 5"	16' 11"	14' 9"	12' 5"
362S200-97	24	50	17' 6"	15' 3"	12' 11"	15' 11"	13' 11"	11' 8"	14' 9"	12' 11"	10' 10"
362S250-33	12	33	16' 6"	14' 5"	12' 2"	14' 7"	13' 2"	11' 1"	13' 0"	12' 2"	10' 3"
362S250-33	16	33	14' 7"	13' 2"	11' 1"	12' 7" e	11' 11"	10' 1"	11' 3" e	11' 1" e	9' 4"
362S250-33	24	33	11' 11" e	11' 6" e	9' 8"	10' 4" e	10' 4" e	8' 9" e	9' 3" e	9' 3" e	8' 2" e
362S250-43	12	33	18' 4"	16' 0"	13' 6"	16' 7"	14' 6"	12' 3"	15' 5"	13' 6"	11' 4"
362S250-43	16	33	16' 7"	14' 6"	12' 3"	15' 0"	13' 2"	11' 2"	13' 5"	12' 3"	10' 4"
362S250-43	24	33	14' 2"	12' 8"	10' 8"	12' 3"	11' 6"	9' 9"	11' 0"	10' 8"	9' 0"
362S250-54	12	33	19' 7"	17' 2"	14' 6"	17' 10"	15' 7"	13' 2"	16' 7"	14' 6"	12' 2"
362S250-54	16	33	17' 10"	15' 7"	13' 2"	16' 2"	14' 2"	11' 11"	15' 0"	13' 2"	11' 1"
362S250-54	24	33	15' 7"	13' 7"	11' 6"	13' 11"	12' 4"	10' 5"	12' 6"	11' 6"	9' 8"
362S250-54	12	50	19' 7"	17' 1"	14' 5"	17' 9"	15' 6"	13' 1"	16' 6"	14' 5"	12' 2"
362S250-54	16	50	17' 9"	15' 6"	13' 1"	16' 2"	14' 1"	11' 11"	15' 0"	13' 1"	11' 1"
362S250-54	24	50	15' 6"	13' 7"	11' 5"	14' 1"	12' 4"	10' 5"	13' 1"	11' 5"	9' 8"
362S250-68	12	33	21' 0"	18' 5"	15' 6"	19' 1"	16' 8"	14' 1"	17' 9"	15' 6"	13' 1"
362S250-68	16	33	19' 1"	16' 8"	14' 1"	17' 4"	15' 2"	12' 10"	16' 1"	14' 1"	11' 11"
362S250-68	24	33	16' 8"	14' 7"	12' 4"	15' 2"	13' 3"	11' 2"	14' 1"	12' 4"	10' 5"
362S250-68	12	50	21' 0"	18' 5"	15' 6"	19' 1"	16' 8"	14' 1"	17' 9"	15' 6"	13' 1"
362S250-68	16	50	19' 1"	16' 8"	14' 1"	17' 4"	15' 2"	12' 10"	16' 1"	14' 1"	11' 11"
362S250-68	24	50	16' 8"	14' 7"	12' 4"	15' 2"	13' 3"	11' 2"	14' 1"	12' 4"	10' 5"
362S250-97	12	33	23' 4"	20' 4"	17' 2"	21' 2"	18' 6"	15' 7"	19' 8"	17' 2"	14' 6"
362S250-97	16	33	21' 2"	18' 6"	15' 7"	19' 3"	16' 10"	14' 2"	17' 10"	15' 7"	13' 2"
362S250-97	24	33	18' 6"	16' 2"	13' 8"	16' 10"	14' 8"	12' 5"	15' 7"	13' 8"	11' 6"
362S250-97	12	50	23' 4"	20' 4"	17' 2"	21' 2"	18' 6"	15' 7"	19' 8"	17' 2"	14' 6"
362S250-97	16	50	21' 2"	18' 6"	15' 7"	19' 3"	16' 10"	14' 2"	17' 10"	15' 7"	13' 2"
362S250-97	24	50	18' 6"	16' 2"	13' 8"	16' 10"	14' 8"	12' 5"	15' 7"	13' 8"	11' 6"
362S300-33	12	33	17' 0"	14' 11"	12' 7"	14' 8"	13' 6"	11' 5"	13' 2"	12' 7"	10' 7"
362S300-33	16	33	14' 8"	13' 6"	11' 5"	12' 9" e	12' 4"	10' 4"	11' 5" e	11' 5" e	9' 8"
362S300-33	24	33	12' 0" e	11' 10" e	10' 0"	10' 5" e	10' 5" e	9' 1" e	9' 4" e	9' 4" e	8' 5" e
362S300-43	12	33	18' 11"	16' 7"	13' 11"	17' 3"	15' 0"	12' 8"	15' 7"	13' 11"	11' 9"
362S300-43	16	33	17' 3"	15' 0"	12' 8"	15' 1"	13' 8"	11' 6"	13' 6"	12' 8"	10' 8"
362S300-43	24	33	14' 2"	13' 2"	11' 1"	12' 4"	11' 11"	10' 1"	11' 0"	11' 0"	9' 4"
362S300-54	12	33	20' 6"	17' 11"	15' 1"	18' 7"	16' 3"	13' 9"	17' 3"	15' 1"	12' 9"
362S300-54	16	33	18' 7"	16' 3"	13' 9"	16' 11"	14' 9"	12' 6"	15' 6"	13' 9"	11' 7"
362S300-54	24	33	16' 3"	14' 3"	12' 0"	14' 2"	12' 11"	10' 11"	12' 8"	12' 0"	10' 1"
362S300-54	12	50	20' 1"	17' 6"	14' 9"	18' 3"	15' 11"	13' 5"	16' 11"	14' 9"	12' 6"
362S300-54	16	50	18' 3"	15' 11"	13' 5"	16' 7"	14' 6"	12' 2"	15' 5"	13' 5"	11' 4"
362S300-54	24	50	15' 11"	13' 11"	11' 9"	14' 6"	12' 8"	10' 8"	13' 5"	11' 9"	9' 11"
362S300-68	12	33	22' 0"	19' 3"	16' 3"	20' 0"	17' 6"	14' 9"	18' 7"	16' 3"	13' 8"
362S300-68	16	33	20' 0"	17' 6"	14' 9"	18' 2"	15' 11"	13' 5"	16' 11"	14' 9"	12' 5"
362S300-68	24	33	17' 6"	15' 3"	12' 11"	15' 11"	13' 11"	11' 9"	14' 7"	12' 11"	10' 10"
362S300-68	12	50	21' 11"	19' 2"	16' 2"	19' 11"	17' 5"	14' 8"	18' 6"	16' 2"	13' 7"
362S300-68	16	50	19' 11"	17' 5"	14' 8"	18' 1"	15' 9"	13' 4"	16' 9"	14' 8"	12' 4"
362S300-68	24	50	17' 5"	15' 2"	12' 10"	15' 9"	13' 10"	11' 8"	14' 8"	12' 10"	10' 10"
362S300-97	12	33	24' 6"	21' 4"	18' 0"	22' 3"	19' 5"	16' 4"	20' 8"	18' 0"	15' 2"
362S300-97	16	33	22' 3"	19' 5"	16' 4"	20' 2"	17' 8"	14' 11"	18' 9"	16' 4"	13' 10"
362S300-97	24	33	19' 5"	17' 0"	14' 4"	17' 8"	15' 5"	13' 0"	16' 4"	14' 4"	12' 1"
362S300-97	12	50	24' 4"	21' 3"	17' 11"	22' 2"	19' 4"	16' 4"	20' 7"	17' 11"	15' 2"
362S300-97	16	50	22' 2"	19' 4"	16' 4"	20' 1"	17' 7"	14' 10"	18' 8"	16' 4"	13' 9"
362S300-97	24	50	19' 4"	16' 11"	14' 3"	17' 7"	15' 4"	12' 11"	16' 4"	14' 3"	12' 0"

*See Page 13 for table notes.

LIMITING WALL HEIGHTS - CURTAIN WALL (15-25 psf)

Stud Member	Spacing, in, oc	Fy, ksi	15 psf			20 psf			25 psf		
			L/240	L/360	L/600	L/240	L/360	L/600	L/240	L/360	L/600
400S250-33	12	33	17' 10"	15' 7"	13' 1"	15' 5"	14' 2"	11' 11"	13' 10" e	13' 1" e	11' 1"
400S250-33	16	33	15' 5"	14' 2"	11' 11"	13' 4" e	12' 10" e	10' 10"	11' 11" e	11' 11" e	10' 1" e
400S250-33	24	33	12' 7" e	12' 4" e	10' 5"	10' 11" e	10' 11" e	9' 6" e	9' 9" e	9' 9" e	8' 9" e
400S250-43	12	33	19' 8"	17' 2"	14' 6"	17' 11"	15' 8"	13' 2"	16' 6"	14' 6"	12' 3"
400S250-43	16	33	17' 11"	15' 8"	13' 2"	15' 11"	14' 2"	12' 0"	14' 3"	13' 2"	11' 1"
400S250-43	24	33	15' 0"	13' 8"	11' 6"	13' 0"	12' 5"	10' 6"	11' 8" e	11' 6" e	9' 9"
400S250-54	12	33	21' 2"	18' 6"	15' 7"	19' 2"	16' 9"	14' 2"	17' 10"	15' 7"	13' 2"
400S250-54	16	33	19' 2"	16' 9"	14' 2"	17' 5"	15' 3"	12' 10"	16' 2"	14' 2"	11' 11"
400S250-54	24	33	16' 9"	14' 8"	12' 4"	14' 10"	13' 4"	11' 3"	13' 3"	12' 4"	10' 5"
400S250-54	12	50	21' 1"	18' 5"	15' 6"	19' 2"	16' 9"	14' 1"	17' 9"	15' 6"	13' 1"
400S250-54	16	50	19' 2"	16' 9"	14' 1"	17' 5"	15' 2"	12' 10"	16' 2"	14' 1"	11' 11"
400S250-54	24	50	16' 9"	14' 7"	12' 4"	15' 2"	13' 3"	11' 2"	14' 1"	12' 4"	10' 5"
400S250-68	12	33	22' 8"	19' 10"	16' 8"	20' 7"	18' 0"	15' 2"	19' 1"	16' 8"	14' 1"
400S250-68	16	33	20' 7"	18' 0"	15' 2"	18' 9"	16' 4"	13' 9"	17' 4"	15' 2"	12' 10"
400S250-68	24	33	18' 0"	15' 9"	13' 3"	16' 4"	14' 3"	12' 1"	15' 2"	13' 3"	11' 2"
400S250-68	12	50	22' 8"	19' 10"	16' 8"	20' 7"	18' 0"	15' 2"	19' 1"	16' 8"	14' 1"
400S250-68	16	50	20' 7"	18' 0"	15' 2"	18' 9"	16' 4"	13' 9"	17' 4"	15' 2"	12' 10"
400S250-68	24	50	18' 0"	15' 9"	13' 3"	16' 4"	14' 3"	12' 1"	15' 2"	13' 3"	11' 2"
400S250-97	12	33	25' 2"	21' 11"	18' 6"	22' 10"	19' 11"	16' 10"	21' 2"	18' 6"	15' 7"
400S250-97	16	33	22' 10"	19' 11"	16' 10"	20' 9"	18' 1"	15' 3"	19' 3"	16' 10"	14' 2"
400S250-97	24	33	19' 11"	17' 5"	14' 8"	18' 1"	15' 10"	13' 4"	16' 10"	14' 8"	12' 5"
400S250-97	12	50	25' 2"	21' 11"	18' 6"	22' 10"	19' 11"	16' 10"	21' 2"	18' 6"	15' 7"
400S250-97	16	50	22' 10"	19' 11"	16' 10"	20' 9"	18' 1"	15' 3"	19' 3"	16' 10"	14' 2"
400S250-97	24	50	19' 11"	17' 5"	14' 8"	18' 1"	15' 10"	13' 4"	16' 10"	14' 8"	12' 5"
400S300-33	12	33	17' 11"	16' 0"	13' 6"	15' 6"	14' 7"	12' 3"	13' 11" e	13' 6" e	11' 5"
400S300-33	16	33	15' 6"	14' 7"	12' 3"	13' 5" e	13' 3" e	11' 2"	12' 0" e	12' 0" e	10' 4" e
400S300-33	24	33	12' 8" e	12' 8" e	10' 9"	11' 0" e	11' 0" e	9' 9" e	9' 10" e	9' 10" e	9' 1" e
400S300-43	12	33	20' 4"	17' 10"	15' 0"	18' 5"	16' 2"	13' 8"	16' 5"	15' 0"	12' 8"
400S300-43	16	33	18' 5"	16' 2"	13' 8"	15' 11"	14' 8"	12' 5"	14' 3"	13' 8"	11' 6"
400S300-43	24	33	15' 0"	14' 2"	11' 11"	13' 0"	12' 10"	10' 10"	11' 8" e	11' 8" e	10' 1"
400S300-54	12	33	22' 1"	19' 3"	16' 3"	20' 0"	17' 6"	14' 9"	18' 7"	16' 3"	13' 8"
400S300-54	16	33	20' 0"	17' 6"	14' 9"	18' 2"	15' 11"	13' 5"	16' 5"	14' 9"	12' 5"
400S300-54	24	33	17' 3"	15' 3"	12' 11"	15' 0"	13' 11"	11' 9"	13' 5"	12' 11"	10' 11"
400S300-54	12	50	21' 7"	18' 10"	15' 11"	19' 7"	17' 2"	14' 5"	18' 3"	15' 11"	13' 5"
400S300-54	16	50	19' 7"	17' 2"	14' 5"	17' 10"	15' 7"	13' 2"	16' 7"	14' 5"	12' 2"
400S300-54	24	50	17' 2"	15' 0"	12' 8"	15' 7"	13' 7"	11' 6"	14' 5"	12' 8"	10' 8"
400S300-68	12	33	23' 9"	20' 9"	17' 6"	21' 7"	18' 10"	15' 11"	20' 0"	17' 6"	14' 9"
400S300-68	16	33	21' 7"	18' 10"	15' 11"	19' 7"	17' 1"	14' 5"	18' 2"	15' 11"	13' 5"
400S300-68	24	33	18' 10"	16' 5"	13' 10"	17' 1"	14' 11"	12' 7"	15' 6"	13' 10"	11' 8"
400S300-68	12	50	23' 7"	20' 7"	17' 4"	21' 5"	18' 8"	15' 9"	19' 10"	17' 4"	14' 8"
400S300-68	16	50	21' 5"	18' 8"	15' 9"	19' 5"	17' 0"	14' 4"	18' 1"	15' 9"	13' 4"
400S300-68	24	50	18' 8"	16' 4"	13' 9"	17' 0"	14' 10"	12' 6"	15' 9"	13' 9"	11' 7"
400S300-97	12	33	26' 4"	23' 0"	19' 5"	23' 11"	20' 11"	17' 8"	22' 3"	19' 5"	16' 4"
400S300-97	16	33	23' 11"	20' 11"	17' 8"	21' 9"	19' 0"	16' 0"	20' 2"	17' 8"	14' 10"
400S300-97	24	33	20' 11"	18' 3"	15' 5"	19' 0"	16' 7"	14' 0"	17' 8"	15' 5"	13' 0"
400S300-97	12	50	26' 3"	22' 11"	19' 4"	23' 10"	20' 10"	17' 7"	22' 2"	19' 4"	16' 4"
400S300-97	16	50	23' 10"	20' 10"	17' 7"	21' 8"	18' 11"	16' 0"	20' 1"	17' 7"	14' 10"
400S300-97	24	50	20' 10"	18' 2"	15' 4"	18' 11"	16' 6"	13' 11"	17' 7"	15' 4"	12' 11"

*See Page 13 for table notes.

LIMITING WALL HEIGHTS - CURTAIN WALL (15-25 psf)

Stud Member	Spacing, in, oc	Fy, ksi	15 psf			20 psf			25 psf		
			L/240	L/360	L/600	L/240	L/360	L/600	L/240	L/360	L/600
600S250-43	12	33	26' 10"	23' 5"	19' 9"	23' 3"	21' 3"	17' 11"	20' 10" e	19' 9"	16' 8"
600S250-43	16	33	23' 3"	21' 3"	17' 11"	20' 2" e	19' 4"	16' 4"	18' 0" e	17' 11" e	15' 2"
600S250-43	24	33	19' 0" e	18' 7" e	15' 8"	16' 5" e	16' 5" e	14' 3" e	14' 8" e	14' 8" e	13' 3" e
600S250-54	12	33	28' 9"	25' 2"	21' 2"	26' 2"	22' 10"	19' 3"	24' 2"	21' 2"	17' 11"
600S250-54	16	33	26' 2"	22' 10"	19' 3"	23' 5"	20' 9"	17' 6"	20' 11"	19' 3"	16' 3"
600S250-54	24	33	22' 1"	19' 11"	16' 10"	19' 1"	18' 2"	15' 4"	17' 1" e	16'10"e	14' 2"
600S250-54	12	50	28' 8"	25' 0"	21' 1"	26' 0"	22' 9"	19' 2"	24' 2"	21' 1"	17' 10"
600S250-54	16	50	26' 0"	22' 9"	19' 2"	23' 8"	20' 8"	17' 5"	21' 11"	19' 2"	16' 2"
600S250-54	24	50	22' 9"	19' 10"	16' 9"	20' 8"	18' 1"	15' 3"	19' 2"	16' 9"	14' 2"
600S250-68	12	33	30' 11"	27' 0"	22' 9"	28' 1"	24' 6"	20' 8"	26'1"	22' 9"	19' 2"
600S250-68	16	33	28' 1"	24' 6"	20' 8"	25' 6"	22' 3"	18' 10"	23' 8"	20'8"	17' 5"
600S250-68	24	33	24' 6"	21' 5"	18' 1"	22' 3"	19' 6"	16' 5"	20' 6"	18' 1"	15' 3"
600S250-68	12	50	30' 11"	27' 0"	22' 9"	28' 1"	24' 6"	20' 8"	26' 1"	22' 9"	19' 2"
600S250-68	16	50	28' 1"	24' 6"	20' 8"	25' 6"	22' 3"	18' 10"	23' 8"	20' 8"	17' 5"
600S250-68	24	50	24' 6"	21' 5"	18' 1"	22' 3"	19' 6"	16' 5"	20' 8"	18'1"	15' 3"
600S250-97	12	33	34' 4"	30' 0"	25' 4"	31'3"	27'3"	23' 0"	29' 0"	25' 4"	21' 4"
600S250-97	16	33	31' 3"	27' 3"	23' 0"	28'4"	24'9"	20' 11"	26' 4"	23' 0"	19' 5"
600S250-97	24	33	27' 3"	23' 10"	20' 1"	24'9"	21'8"	18' 3"	23' 0"	20' 1"	16' 11"
600S250-97	12	50	34' 4"	30' 0"	25' 4"	31'3"	27'3"	23' 0"	29' 0"	25' 4"	21' 4"
600S250-97	16	50	31' 3"	27' 3"	23' 0"	28'4"	24'9"	20' 11"	26' 4"	23' 0"	19' 5"
600S250-97	24	50	27' 3"	23' 10"	20' 1"	24'9"	21'8"	18' 3"	23' 0"	20' 1"	16' 11"
600S300-54	12	33	29' 10"	26' 1"	22' 0"	27'2"	23'8"	20' 0"	24' 8"	22' 0"	18' 7"
600S300-54	16	33	27' 2"	23' 8"	20' 0"	23' 11"	21' 6"	18' 2"	21' 4"	20' 0"	16' 10"
600S300-54	24	33	22' 6"	20' 9"	17' 6"	19'6"	18'10"	15' 10"	17' 5" e	17' 5" e	14' 9"
600S300-54	12	50	29' 3"	25' 7"	21' 7"	26' 7"	23' 3"	19' 7"	24' 8"	21' 7"	18' 2"
600S300-54	16	50	26' 7"	23' 3"	19' 7"	24' 2"	21' 1"	17' 10"	22' 5"	19' 7"	16' 6"
600S300-54	24	50	23' 3"	20' 3"	17' 1"	21' 1"	18' 5"	15' 7"	19' 7"	17' 1"	14' 5"
600S300-68	12	33	32' 2"	28' 1"	23' 9"	29' 3"	25' 7"	21' 7"	27' 2"	23' 9"	20' 0"
600S300-68	16	33	29' 3"	25' 7"	21' 7"	26' 7"	23' 3"	19' 7"	24' 8"	21' 7"	18' 2"
600S300-68	24	33	25' 7"	22' 4"	18' 10"	22' 8"	20' 3"	17' 1"	20' 4"	18' 10"	15' 11"
600S300-68	12	50	31' 11"	27' 11"	23' 6"	29' 0"	25' 4"	21' 5"	26' 11"	23' 6"	19' 10"
600S300-68	16	50	29' 0"	25' 4"	21' 5"	26' 4"	23' 0"	19' 5"	24' 6"	21' 5"	18' 0"
600S300-68	24	50	25' 4"	22' 2"	18' 8"	23' 0"	20' 2"	17' 0"	21' 5"	18' 8"	15' 9"
600S300-97	12	33	35' 10"	31' 4"	26' 5"	32' 7"	28' 5"	24' 0"	30' 3"	26' 5"	22' 3"
600S300-97	16	33	32' 7"	28' 5"	24' 0"	29' 7"	25' 10"	21' 10"	27' 6"	24' 0"	20' 3"
600S300-97	24	33	28' 5"	24' 10"	21' 0"	25' 10"	22' 7"	19' 1"	24' 0"	21' 0"	17' 8"
600S300-97	12	50	35' 8"	31' 2"	26' 4"	32' 5"	28' 4"	23' 11"	30' 1"	26' 4"	22' 2"
600S300-97	16	50	32' 5"	28' 4"	23' 11"	29' 6"	25' 9"	21' 8"	27' 4"	23' 11"	20' 2"
600S300-97	24	50	28' 4"	24' 9"	20' 10"	25' 9"	22' 6"	19' 0"	23' 11"	20' 10"	17' 7"
600S350-54	12	33	31' 4"	27' 4"	23' 1"	28' 5"	24' 10"	20' 11"	26' 5"	23' 1"	19' 5"
600S350-54	16	33	28' 5"	24' 10"	20' 11"	25' 10"	22' 7"	19' 0"	23' 8"	20' 11"	17' 8"
600S350-54	24	33	24' 10"	21' 8"	18' 4"	21' 7" e	19' 9"	16' 8"	19' 4" e	18' 4" e	15' 5"

*See Page 13 for table notes.

LIMITING WALL HEIGHTS - CURTAIN WALL (15-25 psf)

Stud Member	Spacing, in, oc	Fy, ksi	15 psf			20 psf			25 psf		
			L/240	L/360	L/600	L/240	L/360	L/600	L/240	L/360	L/600
800S250-43	12	33	31' 4"	29' 3"	24' 8"	27' 1" e	26' 7" e	22' 5"	24' 3" e	24' 3" e	20' 10" e
800S250-43	16	33	27' 1" e	26' 7" e	22' 5"	23' 6" e	23' 6" e	20' 4" e	21' 0" e	21' 0" e	18' 11" e
800S250-43	24	33	22' 2" e	22' 2" e	19' 7" e	19' 2" e	19' 2" e	17' 10" e	17' 2" e	17' 2" e	16' 6" e
800S250-54	12	33	36' 0"	31' 5"	26' 6"	31' 8"	28' 7"	24' 1"	28' 4"	26' 6"	22' 4"
800S250-54	16	33	31' 8"	28' 7"	24' 1"	27' 5"	25' 11"	21' 11"	24' 6" e	24' 1" e	20' 4"
800S250-54	24	33	25' 10" e	24' 11"	21' 1"	22' 5" e	22' 5" e	19' 1" e	20' 0" e	20' 0" e	17' 9" e
800S250-54	12	50	35' 10"	31' 4"	26' 5"	32' 7"	28' 5"	24' 0"	30' 3"	26' 5"	22' 3"
800S250-54	16	50	32' 7"	28' 5"	24' 0"	29' 7"	25' 10"	21' 10"	27' 6"	24' 0"	20' 3"
800S250-54	24	50	28' 5"	24' 10"	21' 0"	25' 7"	22' 7"	19' 1"	22' 10"	21' 0"	17' 8"
800S250-68	12	33	38' 8"	33' 9"	28' 6"	35' 2"	30' 8"	25' 11"	32' 7"	28' 6"	24' 0"
800S250-68	16	33	35' 2"	30' 8"	25' 11"	31' 11"	27' 11"	23' 6"	29' 7"	25' 11"	21' 10"
800S250-68	24	33	30' 8"	26' 10"	22' 7"	27' 0"	24' 4"	20' 7"	24' 1" e	22' 7"	19' 1"
800S250-68	12	50	38' 8"	33' 9"	28' 6"	35' 1"	30' 8"	25' 10"	32' 7"	28' 6"	24' 0"
800S250-68	16	50	35' 1"	30' 8"	25' 10"	31' 11"	27' 10"	23' 6"	29' 7"	25' 10"	21' 10"
800S250-68	24	50	30' 8"	26' 10"	22' 7"	27' 10"	24' 4"	20' 6"	25' 10"	22' 7"	19' 1"
800S250-97	12	33	43' 1"	37' 7"	31' 9"	39' 2"	34' 2"	28' 10"	36' 4"	31' 9"	26' 9"
800S250-97	16	33	39' 2"	34' 2"	28' 10"	35' 7"	31' 1"	26' 2"	33' 0"	28' 10"	24' 4"
800S250-97	24	33	34' 2"	29' 10"	25' 2"	31' 1"	27' 2"	22' 11"	28' 10"	25' 2"	21' 3"
800S250-97	12	50	43' 1"	37' 7"	31' 9"	39' 2"	34' 2"	28' 10"	36' 4"	31' 9"	26' 9"
800S250-97	16	50	39' 2"	34' 2"	28' 10"	35' 7"	31' 1"	26' 2"	33' 0"	28' 10"	24' 4"
800S250-97	24	50	34' 2"	29' 10"	25' 2"	31' 1"	27' 2"	22' 11"	28' 10"	25' 2"	21' 3"
800S300-54	12	33	37' 2"	32' 6"	27' 5"	32' 3"	29' 6"	24' 11"	28' 10"	27' 5"	23' 1"
800S300-54	16	33	32' 3"	29' 6"	24' 11"	27' 11"	26' 10"	22' 8"	24' 11" e	24' 11" e	21' 0"
800S300-54	24	33	26' 4" e	25' 10" e	21' 9"	22' 9" e	22' 9" e	19' 9" e	20' 5" e	20' 5" e	18' 4" e
800S300-54	12	50	36' 7"	32' 0"	27' 0"	33' 3"	29' 1"	24' 6"	30' 11"	27' 0"	22' 9"
800S300-54	16	50	33' 3"	29' 1"	24' 6"	30' 3"	26' 5"	22' 3"	28' 1"	24' 6"	20' 8"
800S300-54	24	50	29' 1"	25' 5"	21' 5"	25' 11"	23' 1"	19' 5"	23' 2" e	21' 5"	18' 1"
800S300-68	12	33	40' 2"	35' 1"	29' 7"	36' 6"	31' 10"	26' 10"	33' 8"	29' 7"	24' 11"
800S300-68	16	33	36' 6"	31' 10"	26' 10"	32' 7"	28' 11"	24' 5"	29' 2"	26' 10"	22' 8"
800S300-68	24	33	30' 9"	27' 10"	23' 6"	26' 8"	25' 3"	21' 4"	23' 10" e	23' 6" e	19' 10"
800S300-68	12	50	39' 9"	34' 9"	29' 4"	36' 2"	31' 7"	26' 8"	33' 7"	29' 4"	24' 9"
800S300-68	16	50	36' 2"	31' 7"	26' 8"	32' 10"	28' 8"	24' 2"	30' 6"	26' 8"	22' 6"
800S300-68	24	50	31' 7"	27' 7"	23' 3"	28' 8"	25' 1"	21' 2"	26' 8"	23' 3"	19' 7"
800S300-97	12	33	44' 9"	39' 1"	33' 0"	40' 8"	35' 6"	30' 0"	37' 9"	33' 0"	27' 10"
800S300-97	16	33	40' 8"	35' 6"	30' 0"	37' 0"	32' 3"	27' 3"	34' 4"	30' 0"	25' 3"
800S300-97	24	33	35' 6"	31' 1"	26' 2"	32' 3"	28' 2"	23' 9"	30' 0"	26' 2"	22' 1"
800S300-97	12	50	44' 7"	38' 11"	32' 10"	40' 6"	35' 4"	29' 10"	37' 7"	32' 10"	27' 8"
800S300-97	16	50	40' 6"	35' 4"	29' 10"	36' 9"	32' 2"	27' 1"	34' 2"	29' 10"	25' 2"
800S300-97	24	50	35' 4"	30' 11"	26' 1"	32' 2"	28' 1"	23' 8"	29' 10"	26' 1"	22' 0"
800S350-54	12	33	39' 0"	34' 1"	28' 9"	35' 5"	30' 11"	26' 1"	31' 11" e	28' 9"	24' 3"
800S350-54	16	33	35' 5"	30' 11"	26' 1"	30' 11" e	28' 1"	23' 8"	27' 8" e	26' 1" e	22' 0"
800S350-54	24	33	29' 2" e	27' 0" e	22' 9"	25' 3" e	24' 7" e	20' 8" e	22' 7" e	22' 7" e	19' 3" e
800S350-54	12	50	38' 7"	33' 8"	28' 5"	35' 1"	30' 7"	25' 10"	32' 6"	28' 5"	24' 0"
800S350-54	16	50	35' 1"	30' 7"	25' 10"	31' 10"	27' 10"	23' 6"	29' 7"	25' 10"	21' 9"
800S350-54	24	50	30' 7"	26' 9"	22' 7"	27' 10"	24' 4"	20' 6"	25' 9" e	22' 7"	19' 0"
800S350-68	12	33	42' 3"	36' 10"	31' 1"	38' 4"	33' 6"	28' 3"	35' 7"	31' 1"	26' 3"
800S350-68	16	33	38' 4"	33' 6"	28' 3"	34' 10"	30' 5"	25' 8"	32' 3"	28' 3"	23' 10"
800S350-68	24	33	33' 6"	29' 3"	24' 8"	29' 5" e	26' 7"	22' 5"	26' 4" e	24' 8" e	20' 10"
800S350-68	12	50	42' 1"	36' 9"	31' 0"	38' 2"	33' 5"	28' 2"	35' 6"	31' 0"	26' 2"
800S350-68	16	50	38' 2"	33' 5"	28' 2"	34' 9"	30' 4"	25' 7"	32' 3"	28' 2"	23' 9"
800S350-68	24	50	33' 5"	29' 2"	24' 7"	30' 4"	26' 6"	22' 4"	28' 2"	24' 7"	20' 9"
800S350-97	12	33	47' 1"	41' 2"	34' 8"	42' 10"	37' 5"	31' 6"	39' 9"	34' 8"	29' 3"
800S350-97	16	33	42' 10"	37' 5"	31' 6"	38' 11"	34' 0"	28' 8"	36' 1"	31' 6"	26' 7"
800S350-97	24	33	37' 5"	32' 8"	27' 7"	34' 0"	29' 8"	25' 0"	31' 6"	27' 7"	23' 3"
800S350-97	12	50	47' 1"	41' 2"	34' 8"	42' 10"	37' 5"	31' 6"	39' 9"	34' 8"	29' 3"
800S350-97	16	50	42' 10"	37' 5"	31' 6"	38' 11"	34' 0"	28' 8"	36' 1"	31' 6"	26' 7"
800S350-97	24	50	37' 5"	32' 8"	27' 7"	34' 0"	29' 8"	25' 0"	31' 6"	27' 7"	23' 3"

*See Page 13 for table notes.

LIMITING WALL HEIGHTS - CURTAIN WALL (15-25 psf)

Stud Member	Spacing, in, oc	15 psf			20 psf			25 psf		
		L/240	L/360	L/600	L/240	L/360	L/600	L/240	L/360	L/600
1000S162-43	12	31' 2" e	31' 2" e	26' 7"	27' 0" e	27' 0" e	24' 2" e	24' 1" e	24' 1" e	22' 5" e
1000S162-43	16	27' 0" e	27' 0" e	24' 2" e	23' 4" e	23' 4" e	21' 11" e	20' 11" e	20' 11" e	20' 4" e
1000S162-43	24	22' 0" e	22' 0" e	21' 1" e	19' 1" e	19' 1" e	19' 1" e	17' 1" e	17' 1" e	17' 1" e
1000S162-54	12	38' 10"	33' 11"	28' 7"	35' 4"	30' 10"	26' 0"	32' 3"	28' 7"	24' 2"
1000S162-54	16	35' 4"	30' 10"	26' 0"	31' 2"	28' 0"	23' 8"	27' 11"	26' 0"	21' 11"
1000S162-54	24	29' 5"	26' 11"	22' 9"	25' 6"	24' 6"	20' 8"	22' 9" e	22' 9" e	19' 2"
1000S162-68	12	42' 2"	36' 10"	31' 1"	38' 3"	33' 5"	28' 2"	35' 6"	31' 1"	26' 2"
1000S162-68	16	38' 3"	33' 5"	28' 2"	34' 9"	30' 5"	25' 8"	32' 3"	28' 2"	23' 9"
1000S162-68	24	33' 5"	29' 3"	24' 8"	30' 1"	26' 6"	22' 5"	26' 11"	24' 8"	20' 9"
1000S162-97	12	47' 4"	41' 4"	34' 10"	43' 0"	37' 7"	31' 8"	39' 11"	34' 10"	29' 5"
1000S162-97	16	43' 0"	37' 7"	31' 8"	39' 1"	34' 1"	28' 9"	36' 3"	31' 8"	26' 9"
1000S162-97	24	37' 7"	32' 10"	27' 8"	34' 1"	29' 10"	25' 2"	31' 8"	27' 8"	23' 4"
1000S200-43	12	33' 8" e	33' 0" e	27' 10"	29' 2" e	29' 2" e	25' 3" e	26' 1" e	26' 1" e	23' 5" e
1000S200-43	16	29' 2" e	29' 2" e	25' 3" e	25' 3" e	25' 3" e	22' 11" e	22' 7" e	22' 7" e	21' 4" e
1000S200-43	24	23' 10" e	23' 10" e	22' 1" e	20' 7" e	20' 7" e	20' 1" e	18' 5" e	18' 5" e	18' 5" e
1000S200-54	12	40' 8"	35' 6"	30' 0"	36' 11"	32' 3"	27' 3"	34' 4"	30' 0"	25' 3"
1000S200-54	16	36' 11"	32' 3"	27' 3"	33' 7"	29' 4"	24' 9"	30' 1"	27' 3"	23' 0"
1000S200-54	24	31' 9"	28' 2"	23' 9"	27' 6" e	25' 7"	21' 7"	24' 7" e	23' 9" e	20' 1"
1000S200-68	12	44' 0"	38' 5"	32' 5"	40' 0"	34' 11"	29' 6"	37' 2"	32' 5"	27' 4"
1000S200-68	16	40' 0"	34' 11"	29' 6"	36' 4"	31' 9"	26' 9"	33' 9"	29' 6"	24' 10"
1000S200-68	24	34' 11"	30' 6"	25' 9"	31' 9"	27' 9"	23' 5"	28' 10"	25' 9"	21' 9"
1000S200-97	12	49' 5"	43' 2"	36' 5"	44' 11"	39' 3"	33' 1"	41' 8"	36' 5"	30' 9"
1000S200-97	16	44' 11"	39' 3"	33' 1"	40' 10"	35' 8"	30' 1"	37' 10"	33' 1"	27' 11"
1000S200-97	24	39' 3"	34' 3"	28' 11"	35' 8"	31' 2"	26' 3"	33' 1"	28' 11"	24' 5"
1000S250-43	12	34' 8" e	34' 8" e	29' 5"	30' 0" e	30' 0" e	26' 9" e	26' 10" e	26' 10" e	24' 10" e
1000S250-43	16	30' 0" e	30' 0" e	26' 9" e	26' 0" e	26' 0" e	24' 3" e	23' 3" e	23' 3" e	22' 7" e
1000S250-43	24	24' 6" e	24' 6" e	23' 4" e	21' 3" e	21' 3" e	21' 3" e	19' 0" e	19' 0" e	19' 0" e
1000S250-54	12	42' 11"	37' 6"	31' 7"	39' 0"	34' 1"	28' 9"	35' 8"	31' 7"	26' 8"
1000S250-54	16	39' 0"	34' 1"	28' 9"	34' 7"	30' 11"	26' 1"	30' 11"	28' 9"	24' 3"
1000S250-54	24	32' 7"	29' 9"	25' 1"	28' 3" e	27' 0" e	22' 10"	25' 3" e	25' 1" e	21' 2" e
1000S250-68	12	46' 2"	40' 4"	34' 0"	41' 11"	36' 8"	30' 11"	38' 11"	34' 0"	28' 8"
1000S250-68	16	41' 11"	36' 8"	30' 11"	38' 1"	33' 3"	28' 1"	35' 4"	30' 11"	26' 1"
1000S250-68	24	36' 8"	32' 0"	27' 0"	33' 2"	29' 1"	24' 6"	29' 8"	27' 0"	22' 9"
1000S250-97	12	51' 6"	44' 11"	37' 11"	46' 9"	40' 10"	34' 5"	43' 5"	37' 11"	32' 0"
1000S250-97	16	46' 9"	40' 10"	34' 5"	42' 6"	37' 1"	31' 4"	39' 5"	34' 5"	29' 1"
1000S250-97	24	40' 10"	35' 8"	30' 1"	37' 1"	32' 5"	27' 4"	34' 5"	30' 1"	25' 5"
1000S300-54	12	43' 9"	38' 3"	32' 3"	39' 9"	34' 9"	29' 4"	36' 3"	32' 3"	27' 2"
1000S300-54	16	39' 9"	34' 9"	29' 4"	35' 1"	31' 7"	26' 8"	31' 5" e	29' 4"	24' 9"
1000S300-54	24	33' 1"	30' 4"	25' 7"	28' 8" e	27' 7" e	23' 3"	25' 8" e	25' 7" e	21' 7" e
1000S300-68	12	47' 5"	41' 5"	34' 11"	43' 1"	37' 8"	31' 9"	40' 0"	34' 11"	29' 6"
1000S300-68	16	43' 1"	37' 8"	31' 9"	39' 2"	34' 3"	28' 10"	36' 4"	31' 9"	26' 9"
1000S300-68	24	37' 8"	32' 11"	27' 9"	33' 9"	29' 11"	25' 2"	30' 2"	27' 9"	23' 5"
1000S300-97	12	53' 1"	46' 5"	39' 1"	48' 3"	42' 2"	35' 7"	44' 9"	39' 1"	33' 0"
1000S300-97	16	48' 3"	42' 2"	35' 7"	43' 10"	38' 3"	32' 4"	40' 8"	35' 7"	30' 0"
1000S300-97	24	42' 2"	36' 10"	31' 1"	38' 3"	33' 5"	28' 3"	35' 7"	31' 1"	26' 2"

***See Page 13 for table notes.**

12” LIMITING WALL HEIGHTS - CURTAIN WALL (15-25 psf)

Stud Member	Spacing, in, oc	15 psf			20 psf			25 psf		
		L/240	L/360	L/600	L/240	L/360	L/600	L/240	L/360	L/600
1200S162-54	12	44' 8"	39' 1"	32' 11"	38' 10"	35' 6"	29' 11"	34' 9"	32' 11"	27' 9"
1200S162-54	16	38' 10"	35' 6"	29' 11"	33' 7"	32' 3"	27' 2"	30' 1"	29' 11"	25' 3"
1200S162-54	24	31' 8"	31' 0"	26' 2"	27' 5" e	27' 5" e	23' 9"	24' 7" e	24' 7" e	22' 1" e
1200S162-68	12	48' 7"	42' 6"	35' 10"	44' 2"	38' 7"	32' 6"	41' 0"	35' 10"	30' 2"
1200S162-68	16	44' 2"	38' 7"	32' 6"	39' 11"	35' 1"	29' 7"	35' 8"	32' 6"	27' 5"
1200S162-68	24	37' 8"	33' 8"	28' 5"	32' 7"	30' 7"	25' 10"	29' 2"	28' 5"	24' 0"
1200S162-97	12	55' 1"	48' 1"	40' 7"	50' 0"	43' 8"	36' 10"	46' 5"	40' 7"	34' 3"
1200S162-97	16	50' 0"	43' 8"	36' 10"	45' 5"	39' 8"	33' 6"	42' 2"	36' 10"	31' 1"
1200S162-97	24	43' 8"	38' 2"	32' 2"	39' 8"	34' 8"	29' 3"	36' 10"	32' 2"	27' 2"
1200S200-54	12	46' 9"	40' 10"	34' 5"	42' 2"	37' 1"	31' 3"	37' 8"	34' 5"	29' 0"
1200S200-54	16	42' 2"	37' 1"	31' 3"	36' 6"	33' 8"	28' 5"	32' 8" e	31' 3" e	26' 5"
1200S200-54	24	34' 5" e	32' 5"	27' 4"	29' 10" e	29' 5" e	24' 10"	26' 8" e	26' 8" e	23' 1" e
1200S200-68	12	50' 8"	44' 3"	37' 4"	46' 1"	40' 3"	33' 11"	42' 9"	37' 4"	31' 6"
1200S200-68	16	46' 1"	40' 3"	33' 11"	41' 10"	36' 7"	30' 10"	38' 7"	33' 11"	28' 7"
1200S200-68	24	40' 3"	35' 2"	29' 8"	35' 2"	31' 11"	26' 11"	31' 6" e	29' 8"	25' 0"
1200S200-97	12	57' 4"	50' 1"	42' 3"	52' 1"	45' 6"	38' 5"	48' 4"	42' 3"	35' 8"
1200S200-97	16	52' 1"	45' 6"	38' 5"	47' 4"	41' 4"	34' 10"	43' 11"	38' 5"	32' 4"
1200S200-97	24	45' 6"	39' 9"	33' 6"	41' 4"	36' 1"	30' 6"	38' 5"	33' 6"	28' 3"
1200S250-54	12	48' 8"	42' 6"	35' 10"	43' 7"	38' 7"	32' 7"	38' 11"	35' 10"	30' 3"
1200S250-54	16	43' 7"	38' 7"	32' 7"	37' 9"	35' 1"	29' 7"	33' 9" e	32' 7" e	27' 6"
1200S250-54	24	35' 7" e	33' 9" e	28' 5"	30' 10" e	30' 8" e	25' 10" e	27' 7" e	27' 7" e	24' 0" e
1200S250-68	12	52' 10"	46' 1"	38' 11"	48' 0"	41' 11"	35' 4"	44' 6"	38' 11"	32' 10"
1200S250-68	16	48' 0"	41' 11"	35' 4"	43' 7"	38' 1"	32' 1"	39' 10"	35' 4"	29' 10"
1200S250-68	24	41' 11"	36' 7"	30' 11"	36' 4"	33' 3"	28' 1"	32' 6" e	30' 11"	26' 1"
1200S250-97	12	59' 7"	52' 0"	43' 11"	54' 1"	47' 3"	39' 10"	50' 3"	43' 11"	37' 0"
1200S250-97	16	54' 1"	47' 3"	39' 10"	49' 2"	42' 11"	36' 3"	45' 8"	39' 10"	33' 8"
1200S250-97	24	47' 3"	41' 4"	34' 10"	42' 11"	37' 6"	31' 8"	39' 10"	34' 10"	29' 5"
1200S300-54	12	50' 10"	44' 5"	37' 5"	44' 5"	40' 4"	34' 0"	39' 9"	37' 5"	31' 7"
1200S300-54	16	44' 5"	40' 4"	34' 0"	38' 5" e	36' 8"	30' 11"	34' 5" e	34' 0" e	28' 8"
1200S300-54	24	36' 3" e	35' 3" e	29' 9"	31' 5" e	31' 5" e	27' 0" e	28' 1" e	28' 1" e	25' 1" e
1200S300-68	12	54' 11"	48' 0"	40' 5"	49' 11"	43' 7"	36' 9"	46' 4"	40' 5"	34' 1"
1200S300-68	16	49' 11"	43' 7"	36' 9"	45' 4"	39' 7"	33' 5"	40' 7"	36' 9"	31' 0"
1200S300-68	24	42' 10"	38' 1"	32' 1"	37' 1"	34' 7"	29' 2"	33' 2" e	32' 1" e	27' 1"
1200S300-97	12	61' 5"	53' 8"	45' 3"	55' 9"	48' 9"	41' 1"	51' 10"	45' 3"	38' 2"
1200S300-97	16	55' 9"	48' 9"	41' 1"	50' 8"	44' 3"	37' 4"	47' 1"	41' 1"	34' 8"
1200S300-97	24	48' 9"	42' 7"	35' 11"	44' 3"	38' 8"	32' 8"	41' 1"	35' 11"	30' 3"

*See Page 13 for table notes.

LIMITING WALL HEIGHTS - CURTAIN WALL (30-40 psf)

Stud Member	Spacing, in, oc	Fy, ksi	30 psf			35 psf			40 psf		
			L/240	L/360	L/600	L/240	L/360	L/600	L/240	L/360	L/600
250S162-33	12	33	8'11"	7'11"	6'8"	8'3"	7'6"	6'4"	7'8"	7'2"	6'0"
250S162-33	16	33	7'8"	7'2"	6'0"	7'2"	6'10"	5'9"	6'8"e	6'6"e	5'6"
250S162-33	24	33	6'3"e	6'3"e	5'3"	5'10"e	5'10"e	5'0"e	5'5"e	5'5"e	4'10"e
250S162-43	12	33	9'10"	8'7"	7'3"	9'4"	8'2"	6'10"	8'11"	7'9"	6'7"
250S162-43	16	33	8'11"	7'9"	6'7"	8'6"	7'5"	6'3"	8'1"	7'1"	6'0"
250S162-43	24	33	7'7"	6'10"	5'9"	7'1"	6'6"	5'5"	6'7"	6'2"	5'3"
250S162-54	12	50	10'6"	9'2"	7'9"	10'0"	8'8"	7'4"	9'6"	8'4"	7'0"
250S162-54	16	50	9'6"	8'4"	7'0"	9'1"	7'11"	6'8"	8'8"	7'7"	6'5"
250S162-54	24	50	8'4"	7'3"	6'2"	7'11"	6'11"	5'10"	7'7"	6'7"	5'7"
250S162-68	12	50	11'2"	9'9"	8'3"	10'8"	9'4"	7'10"	10'2"	8'11"	7'6"
250S162-68	16	50	10'2"	8'11"	7'6"	9'8"	8'5"	7'1"	9'3"	8'1"	6'10"
250S162-68	24	50	8'11"	7'9"	6'7"	8'5"	7'5"	6'3"	8'1"	7'1"	5'11"
362S162-33	12	33	10'10"	10'6"	8'10"	10'0"e	9'11"e	8'5"	9'5"e	9'5"e	8'0"
362S162-33	16	33	9'5"e	9'5"e	8'0"	8'8"e	8'8"e	7'7"e	8'2"e	8'2"e	7'3"e
362S162-33	24	33	7'8"e	7'8"e	7'0"e	7'1"e	7'1"e	6'8"e	6'8"e	6'8"e	6'4"e
362S162-43	12	33	12'9"	11'5"	9'7"	11'10"	10'10"	9'1"	11'1"	10'4"	8'9"
362S162-43	16	33	11'1"	10'4"	8'9"	10'3"	9'10"	8'3"	9'7"	9'5"	7'11"
362S162-43	24	33	9'0"	9'0"	7'7"	8'4"e	8'4"e	7'3"	7'10"e	7'10"e	6'11"e
362S162-54	12	50	14'0"	12'2"	10'3"	13'3"	11'7"	9'9"	12'8"	11'1"	9'4"
362S162-54	16	50	12'8"	11'1"	9'4"	12'1"	10'6"	8'11"	11'6"	10'1"	8'6"
362S162-54	24	50	11'1"	9'8"	8'2"	10'6"	9'2"	7'9"	10'1"	8'10"	7'5"
362S162-68	12	50	14'11"	13'1"	11'0"	14'2"	12'5"	10'6"	13'7"	11'10"	10'0"
362S162-68	16	50	13'7"	11'10"	10'0"	12'11"	11'3"	9'6"	12'4"	10'9"	9'1"
362S162-68	24	50	11'10"	10'4"	8'9"	11'3"	9'10"	8'4"	10'9"	9'5"	7'11"
362S162-97	12	50	16'6"	14'5"	12'2"	15'8"	13'8"	11'6"	15'0"	13'1"	11'0"
362S162-97	16	50	15'0"	13'1"	11'0"	14'3"	12'5"	10'6"	13'7"	11'11"	10'0"
362S162-97	24	50	13'1"	11'5"	9'8"	12'5"	10'10"	9'2"	11'11"	10'5"	8'9"
362S200-33	12	33	11'4"e	11'0"e	9'3"	10'6"e	10'6"e	8'10"	9'10"e	9'10"e	8'5"e
362S200-33	16	33	9'10"e	9'10"e	8'5"e	9'1"e	9'1"e	8'0"e	8'6"e	8'6"e	7'8"e
362S200-33	24	33	8'0"e	8'0"e	7'4"e	7'5"e	7'5"e	7'0"e	7'0"e	7'0"e	6'8"e
362S200-43	12	33	13'8"	12'0"	10'2"	12'8"	11'5"	9'8"	11'10"	10'11"	9'3"
362S200-43	16	33	11'10"	10'11"	9'3"	11'0"	10'5"	8'9"	10'3"	9'11"	8'4"
362S200-43	24	33	9'8"e	9'7"e	8'1"	9'0"e	9'0"e	7'8"	8'5"e	8'5"e	7'4"e
362S200-54	12	50	14'9"	12'11"	10'11"	14'0"	12'3"	10'4"	13'5"	11'9"	9'11"
362S200-54	16	50	13'5"	11'9"	9'11"	12'9"	11'2"	9'5"	12'2"	10'8"	9'0"
362S200-54	24	50	11'9"	10'3"	8'8"	11'2"	9'9"	8'2"	10'8"	9'4"	7'10"
362S200-68	12	50	15'10"	13'10"	11'8"	15'0"	13'1"	11'1"	14'4"	12'7"	10'7"
362S200-68	16	50	14'4"	12'7"	10'7"	13'8"	11'11"	10'1"	13'1"	11'5"	9'7"
362S200-68	24	50	12'7"	11'0"	9'3"	11'11"	10'5"	8'9"	11'5"	10'0"	8'5"
362S200-97	12	50	17'6"	15'3"	12'11"	16'7"	14'6"	12'3"	15'11"	13'11"	11'8"
362S200-97	16	50	15'11"	13'11"	11'8"	15'1"	13'2"	11'1"	14'5"	12'7"	10'8"
362S200-97	24	50	13'11"	12'1"	10'3"	13'2"	11'6"	9'9"	12'7"	11'0"	9'3"
400S162-33	12	33	11'5"e	11'4"e	9'6"	10'7"e	10'7"e	9'1"	9'11"e	9'11"e	8'8"e
400S162-33	16	33	9'11"e	9'11"e	8'8"e	9'2"e	9'2"e	8'3"e	8'7"e	8'7"e	7'10"e

SECTION PROPERTIES TABLE NOTES

1. Lateral loads have not been modified for strength checks: full loads are applied.
2. Calculated properties are based on AISI S100-16, North American Specification for Cold-Formed Steel Structural Members.
3. The 5 psf live load has not been reduced for deflection checks. For 15 psf or higher wind pressure, read the note below.

   IBC 2012/ASCE 7-10: Due to the change in the model building codes, design wind pressures determined using IBC 2012/ASCE 7-10 are strength level loads (LRFD) in comparison to those determined in earlier IBC codes which were service level loads (ASD). The load/span tables that follow are based on service level (ASD) wind loads. Therefore, to properly use the load/span tables in this catalog, multiply the IBC 2012/ASCE 7-10 design wind pressures by 0.6 (Reference section 2.4 ASCE 7-10) prior to entering the load/span tables.

   - Example:
     * ASCE 7-10 Calculated Design Wind Pressure = 25 psf (Strength level loads, LRFD)
     * Convert to service level loads (ASD) = 25 psf x 0.6 = 15 psf
     * Use 10 pfs as the Pressure Value used in this Table to determine the member span

   Any other Building Code: The load/span tables that follow are based on service level (ASD) wind loads. If the wind load being used meets this criterion, it does not need to be modified prior to using the tables.

4. 15 psf and higher wind pressures have been multiplied by 0.7 for deflection determination, in accordance with footnote f of IBC table 1604.3. The 5 psf live load has not been reduced for deflection checks.
5. Limiting heights are based on continuous support of each flange over the full length of the stud.
6. Limiting heights are based on steel properties alone (non-composite).
7. Web crippling checks are based on end-one flange loading condition using 1-inch end bearing.
8. End shear and web crippling capacity have not been reduced for punchouts. Punchouts are assumed to be atleast 10-inchs from the end of members, in accor dance with ASTM C955, section 4.6.
9. Where limiting heights are followed by "e", web stiffeners are required.

LIMITING WALL HEIGHTS - CURTAIN WALL (30-40 psf)

Stud Member	Spacing, in, oc	Fy, ksi	30 psf			35 psf			40 psf		
			L/240	L/360	L/600	L/240	L/360	L/600	L/240	L/360	L/600
400S162-33	24	33	8'1"e	8'1"e	7'7"e	7'6"e	7'6"e	7'2"e	7'0"e	7'0"e	6'10"e
400S162-43	12	33	13'6"	12'3"	10'4"	12'6"	11'8"	9'10"	11'9"	11'2"	9'5"
400S162-43	16	33	11'9"	11'2"	9'5"	10'10"	10'7"	8'11"	10'2"	10'2"	8'7"
400S162-43	24	33	9'7"e	9'7"e	8'3"	8'10"e	8'10"e	7'10"	8'3"e	8'3"e	7'6"e
400S162-54	12	50	15'1"	13'2"	11'1"	14'4"	12'6"	10'7"	13'8"	12'0"	10'1"
400S162-54	16	50	13'8"	12'0"	10'1"	13'0"	11'4"	9'7"	12'5"	10'10"	9'2"
400S162-54	24	50	12'0"	10'5"	8'10"	11'4"	9'11"	8'5"	10'10"	9'6"	8'0"
400S162-68	12	50	16'2"	14'1"	11'11"	15'4"	13'5"	11'4"	14'8"	12'10"	10'10"
400S162-68	16	50	14'8"	12'10"	10'10"	13'11"	12'2"	10'3"	13'4"	11'8"	9'10"
400S162-68	24	50	12'10"	11'2"	9'5"	12'2"	10'8"	9'0"	11'8"	10'2"	8'7"
400S162-97	12	50	17'10"	15'7"	13'2"	16'11"	14'9"	12'6"	16'2"	14'2"	11'11"
400S162-97	16	50	16'2"	14'2"	11'11"	15'5"	13'5"	11'4"	14'9"	12'10"	10'10"
400S162-97	24	50	14'2"	12'4"	10'5"	13'5"	11'9"	9'11"	12'10"	11'3"	9'6"
400S200-33	12	33	12'0"e	11'10"e	10'0"	11'1"e	11'1"e	9'6"e	10'5"e	10'5"e	9'1"e
400S200-33	16	33	10'5"e	10'5"e	9'1"e	9'8"e	9'8"e	8'8"e	9'0"e	9'0"e	8'3"e
400S200-33	24	33	8'6"e	8'6"e	7'11"e	7'10"e	7'10"e	7'7"e	7'4"e	7'4"e	7'3"e
400S200-43	12	33	14'6"	13'0"	10'11"	13'5"	12'4"	10'5"	12'7"	11'9"	9'11"
400S200-43	16	33	12'7"	11'9"	9'11"	11'7"	11'2"	9'5"	10'10"e	10'8"e	9'0"
400S200-43	24	33	10'3"e	10'3"e	8'8"	9'6"e	9'6"e	8'3"e	8'11"e	8'11"e	7'11"e
400S200-54	12	50	15'11"	13'11"	11'9"	15'1"	13'3"	11'2"	14'6"	12'8"	10'8"
400S200-54	16	50	14'6"	12'8"	10'8"	13'9"	12'0"	10'1"	13'2"	11'6"	9'8"
400S200-54	24	50	12'8"	11'0"	9'4"	12'0"	10'6"	8'10"	11'6"	10'0"	8'5"
400S200-68	12	50	17'1"	14'11"	12'7"	16'2"	14'2"	11'11"	15'6"	13'6"	11'5"
400S200-68	16	50	15'6"	13'6"	11'5"	14'9"	12'10"	10'10"	14'1"	12'4"	10'4"
400S200-68	24	50	13'6"	11'10"	10'0"	12'10"	11'3"	9'6"	12'4"	10'9"	9'1"
400S200-97	12	50	18'11"	16'6"	13'11"	17'11"	15'8"	13'3"	17'2"	15'0"	12'8"
400S200-97	16	50	17'2"	15'0"	12'8"	16'4"	14'3"	12'0"	15'7"	13'7"	11'6"
400S200-97	24	50	15'0"	13'1"	11'0"	14'3"	12'5"	10'6"	13'7"	11'11"	10'0"
600S162-33	12	33	14'6"e	14'6"e	13'1"e	13'5"e	13'5"e	12'5"e	12'7"e	12'7"e	11'11"e
600S162-33	16	33	12'7"e	12'7"e	11'11"e	11'8"e	11'8"e	11'3"e	10'11"e	10'11"e	10'10"e
600S162-33	24	33	10'3"e	10'3"e	10'3"e	9'6"e	9'6"e	9'6"e	8'11"e	8'11"e	8'11"e
600S162-43	12	33	17'11"e	16'11"	14'3"	16'7"e	16'1"e	13'6"	15'6"e	15'4"e	12'11"
600S162-43	16	33	15'6"e	15'4"e	12'11"	14'5"e	14'5"e	12'4"e	13'5"e	13'5"e	11'9"e
600S162-43	24	33	12'8"e	12'8"e	11'4"e	11'9"e	11'9"e	10'9"e	11'0"e	11'0"e	10'3"e
600S162-54	12	50	20'9"	18'1"	15'3"	19'8"	17'3"	14'6"	18'10"	16'6"	13'11"
600S162-54	16	50	18'10"	16'6"	13'11"	17'11"	15'8"	13'2"	17'2"	15'0"	12'7"
600S162-54	24	50	16'6"	14'5"	12'2"	15'8"	13'8"	11'6"	14'8"	13'1"	11'0"
600S162-68	12	50	22'3"	19'5"	16'5"	21'2"	18'5"	15'7"	20'3"	17'8"	14'11"
600S162-68	16	50	20'3"	17'8"	14'11"	19'2"	16'9"	14'2"	18'4"	16'0"	13'6"
600S162-68	24	50	17'8"	15'5"	13'0"	16'9"	14'8"	12'4"	16'0"	14'0"	11'10"
600S162-97	12	50	24'8"	21'6"	18'2"	23'5"	20'5"	17'3"	22'5"	19'7"	16'6"
600S162-97	16	50	22'5"	19'7"	16'6"	21'3"	18'7"	15'8"	20'4"	17'9"	15'0"
600S162-97	24	50	19'7"	17'1"	14'5"	18'7"	16'3"	13'8"	17'9"	15'6"	13'1"
600S162-118	12	50	26'0"	22'9"	19'2"	24'9"	21'7"	18'3"	23'8"	20'8"	17'5"
600S162-118	16	50	23'8"	20'8"	17'5"	22'6"	19'8"	16'7"	21'6"	18'9"	15'10"
600S162-118	24	50	20'8"	18'1"	15'3"	19'8"	17'2"	14'6"	18'9"	16'5"	13'10"
600S200-33	12	33	15'6"e	15'6"e	13'8"e	14'4"e	14'4"e	13'0"e	13'5"e	13'5"e	12'5"e
600S200-33	16	33	13'5"e	13'5"e	12'5"e	12'5"e	12'5"e	11'10"e	11'7"e	11'7"e	11'4"e
600S200-33	24	33	10'11"e	10'11"e	10'10"e	10'2"e	10'2"e	10'2"e	9'6"e	9'6"e	9'6"e
600S200-43	12	33	18'6"e	17'9"e	15'0"	17'1"e	16'10"e	14'3"	16'0"e	16'0"e	13'7"e

SECTION PROPERTIES TABLE NOTES

1. Lateral loads have not been modified for strength checks: full loads are applied.
2. Calculated properties are based on AISI S100-16, North American Specification for Cold-Formed Steel Structural Members.
3. The 5 psf live load has not been reduced for deflection checks. For 15 psf or higher wind pressure, read the note below.

   IBC 2012/ASCE 7-10: Due to the change in the model building codes, design wind pressures determined using IBC 2012/ASCE 7-10 are strength level loads (LRFD) in comparison to those determined in earlier IBC codes which were service level loads (ASD). The load/span tables that follow are based on service level (ASD) wind loads. Therefore, to properly use the load/span tables in this catalog, multiply the IBC 2012/ASCE 7-10 design wind pressures by 0.6 (Reference section 2.4 ASCE 7-10) prior to entering the load/span tables.

   - Example:
     * ASCE 7-10 Calculated Design Wind Pressure = 25 psf (Strength level loads, LRFD)
     * Convert to service level loads (ASD) = 25 psf x 0.6 = 15 psf
     * Use 10 pfs as the Pressure Value used in this Table to determine the member span

   Any other Building Code: The load/span tables that follow are based on service level (ASD) wind loads. If the wind load being used meets this criterion, it does not need to be modified prior to using the tables.

4. 15 psf and higher wind pressures have been multiplied by 0.7 for deflection determination, in accordance with footnote f of IBC table 1604.3. The 5 psf live load has not been reduced for deflection checks.
5. Limiting heights are based on continuous support of each flange over the full length of the stud.
6. Limiting heights are based on steel properties alone (non-composite).
7. Web crippling checks are based on end-one flange loading condition using 1-inch end bearing.
8. End shear and web crippling capacity have not been reduced for punchouts. Punchouts are assumed to be atleast 10-inchs from the end of members, in accor dance with ASTM C955, section 4.6.
9. Where limiting heights are followed by "e", web stiffeners are required.

LIMITING WALL HEIGHTS - CURTAIN WALL (30-40 psf)

Stud Member	Spacing, in, oc	Fy, ksi	30 psf			35 psf			40 psf		
			L/240	L/360	L/600	L/240	L/360	L/600	L/240	L/360	L/600
600S200-43	16	33	16'0"e	16'0"e	13'7"e	14'10"e	14'10"e	12'11"e	13'10"e	13'10"e	12'4"e
600S200-43	24	33	13'1"e	13'1"e	11'11"e	12'1"e	12'1"e	11'3"e	11'4"e	11'4"e	10'9"e
600S200-54	12	50	21'10"	19'1"	16'1"	20'9"	18'1"	15'3"	19'10"	17'4"	14'7"
600S200-54	16	50	19'10"	17'4"	14'7"	18'10"	16'5"	13'10"	18'0"	15'9"	13'3"
600S200-54	24	50	17'4"	15'1"	12'9"	16'2"	14'4"	12'1"	15'1"e	13'9"	11'7"
600S200-68	12	50	23'5"	20'5"	17'3"	22'3"	19'5"	16'4"	21'3"	18'7"	15'8"
600S200-68	16	50	21'3"	18'7"	15'8"	20'2"	17'8"	14'11"	19'4"	16'10"	14'3"
600S200-68	24	50	18'7"	16'3"	13'8"	17'8"	15'5"	13'0"	16'10"	14'9"	12'5"
600S200-97	12	50	26'0"	22'8"	19'2"	24'8"	21'7"	18'2"	23'7"	20'7"	17'5"
600S200-97	16	50	23'7"	20'7"	17'5"	22'5"	19'7"	16'6"	21'5"	18'9"	15'10"
600S200-97	24	50	20'7"	18'0"	15'2"	19'7"	17'1"	14'5"	18'9"	16'4"	13'10"
800S162-33	12	33	16'9"e	16'9"e	16'2"e	15'6"e	15'6"e	15'4"e	14'6"e	14'6"e	14'6"e
800S162-33	16	33	14'6"e	14'6"e	14'6"e	13'5"e	13'5"e	13'5"e	12'7"e	12'7"e	12'7"e
800S162-33	24	33	11'10"e	11'10"e	11'10"e	11'0"e	11'0"e	11'0"e	10'3"e	10'3"e	10'3"e
800S162-43	12	33	20'2"e	20'2"e	17'9"e	18'8"e	18'8"e	16'11"e	17'6"e	17'6"e	16'2"e
800S162-43	16	33	17'6"e	17'6"e	16'2"e	16'2"e	16'2"e	15'4"e	15'2"e	15'2"e	14'8"e
800S162-43	24	33	14'3"e	14'3"e	14'1"e	13'3"e	13'3"e	13'3"e	12'4"e	12'4"e	12'4"e
800S162-54	12	50	25'11"	22'8"	19'1"	24'8"	21'6"	18'2"	23'5"	20'7"	17'4"
800S162-54	16	50	23'5"	20'7"	17'4"	21'8"	19'7"	16'6"	20'3"	18'9"	15'9"
800S162-54	24	50	19'1"	18'0"	15'2"	17'8"e	17'1"e	14'5"	16'6"e	16'4"e	13'9"
800S162-68	12	50	28'1"	24'6"	20'8"	26'8"	23'3"	19'8"	25'6"	22'3"	18'9"
800S162-68	16	50	25'6"	22'3"	18'9"	24'3"	21'2"	17'10"	23'2"	20'3"	17'1"
800S162-68	24	50	22'3"	19'5"	16'5"	20'9"	18'6"	15'7"	19'5"	17'8"	14'11"
800S162-97	12	50	31'2"	27'3"	23'0"	29'7"	25'11"	21'10"	28'4"	24'9"	20'11"
800S162-97	16	50	28'4"	24'9"	20'11"	26'11"	23'6"	19'10"	25'9"	22'6"	19'0"
800S162-97	24	50	24'9"	21'7"	18'3"	23'6"	20'6"	17'4"	22'6"	19'8"	16'7"
800S162-118	12	50	33'0"	28'10"	24'4"	31'4"	27'5"	23'1"	30'0"	26'2"	22'1"
800S162-118	16	50	30'0"	26'2"	22'1"	28'6"	24'11"	21'0"	27'3"	23'10"	20'1"
800S162-118	24	50	26'2"	22'11"	19'4"	24'11"	21'9"	18'4"	23'10"	20'9"	17'6"
800S200-33	12	33	18'0"e	18'0"e	17'3"e	16'8"e	16'8"e	16'4"e	15'7"e	15'7"e	15'7"e
800S200-33	16	33	15'7"e	15'7"e	15'7"e	14'5"e	14'5"e	14'5"e	13'6"e	13'6"e	13'6"e
800S200-33	24	33	12'8"e	12'8"e	12'8"e	11'9"e	11'9"e	11'9"e	11'0"e	11'0"e	11'0"e
800S200-43	12	33	21'7"e	21'7"e	18'9"e	20'0"e	20'0"e	17'10"e	18'8"e	18'8"e	17'1"e
800S200-43	16	33	18'8"e	18'8"e	17'1"e	17'4"e	17'4"e	16'2"e	16'2"e	16'2"e	15'6"e
800S200-43	24	33	15'3"e	15'3"e	14'11"e	14'2"e	14'2"e	14'2"e	13'3"e	13'3"e	13'3"e
800S200-54	12	50	27'5"	23'11"	20'2"	26'0"	22'9"	19'2"	24'10"	21'9"	18'4"
800S200-54	16	50	24'10"	21'9"	18'4"	23'1"	20'8"	17'5"	21'7"e	19'9"	16'8"
800S200-54	24	50	20'5"e	19'0"	16'0"	18'10"e	18'0"e	15'2"	17'8"e	17'3"e	14'7"e
800S200-68	12	50	29'5"	25'8"	21'8"	27'11"	24'5"	20'7"	26'9"	23'4"	19'8"
800S200-68	16	50	26'9"	23'4"	19'8"	25'4"	22'2"	18'8"	24'3"	21'2"	17'11"
800S200-68	24	50	23'4"	20'5"	17'2"	22'2"	19'4"	16'4"	21'2"	18'6"	15'7"
800S200-97	12	50	32'8"	28'7"	24'1"	31'1"	27'2"	22'11"	29'9"	25'11"	21'11"
800S200-97	16	50	29'9"	25'11"	21'11"	28'3"	24'8"	20'10"	27'0"	23'7"	19'11"
800S200-97	24	50	25'11"	22'8"	19'1"	24'8"	21'6"	18'2"	23'7"	20'7"	17'5"

SECTION PROPERTIES TABLE NOTES

1. Lateral loads have not been modified for strength checks: full loads are applied.
2. Calculated properties are based on AISI S100-16, North American Specification for Cold-Formed Steel Structural Members.
3. The 5 psf live load has not been reduced for deflection checks. For 15 psf or higher wind pressure, read the note below.

   IBC 2012/ASCE 7-10: Due to the change in the model building codes, design wind pressures determined using IBC 2012/ASCE 7-10 are strength level loads (LRFD) in comparison to those determined in earlier IBC codes which were service level loads (ASD). The load/span tables that follow are based on service level (ASD) wind loads. Therefore, to properly use the load/span tables in this catalog, multiply the IBC 2012/ASCE 7-10 design wind pressures by 0.6 (Reference section 2.4 ASCE 7-10) prior to entering the load/span tables.

   - Example:
     * ASCE 7-10 Calculated Design Wind Pressure = 25 psf (Strength level loads, LRFD)
     * Convert to service level loads (ASD) = 25 psf x 0.6 = 15 psf
     * Use 10 pfs as the Pressure Value used in this Table to determine the member span

   Any other Building Code: The load/span tables that follow are based on service level (ASD) wind loads. If the wind load being used meets this criterion, it does not need to be modified prior to using the tables.

4. 15 psf and higher wind pressures have been multiplied by 0.7 for deflection determination, in accordance with footnote f of IBC table 1604.3. The 5 psf live load has not been reduced for deflection checks.
5. Limiting heights are based on continuous support of each flange over the full length of the stud.
6. Limiting heights are based on steel properties alone (non-composite).
7. Web crippling checks are based on end-one flange loading condition using 1-inch end bearing.
8. End shear and web crippling capacity have not been reduced for punchouts. Punchouts are assumed to be atleast 10-inchs from the end of members, in accor dance with ASTM C955, section 4.6.
9. Where limiting heights are followed by "e", web stiffeners are required.

LIMITING WALL HEIGHTS - CURTAIN WALL (30-40 psf)

Stud Member	Spacing, in, oc	Fy, ksi	30 psf			35 psf			40 psf		
			L/240	L/360	L/600	L/240	L/360	L/600	L/240	L/360	L/600
362S200-54	12	33	14' 9"	12' 11"	10' 11"	14' 0"	12' 3"	10' 4"	13' 5"	11' 9"	9' 11"
362S200-54	16	33	13' 5"	11' 9"	9' 11"	12' 6"	11' 2"	9' 5"	11' 8"	10' 8"	9' 0"
362S200-54	24	33	11' 0"	10' 3"	8' 8"	10' 2"	9' 9"	8' 2"	9' 7"	9' 4"	7' 10"
362S200-54	12	50	14' 9"	12' 11"	10' 11"	14' 0"	12' 3"	10' 4"	13' 5"	11' 9"	9' 11"
362S200-54	16	50	13' 5"	11' 9"	9' 11"	12' 9"	11' 2"	9' 5"	12' 2"	10' 8"	9' 0"
362S200-54	24	50	11' 9"	10' 3"	8' 8"	11' 2"	9' 9"	8' 2"	10' 8"	9' 4"	7' 10"
362S200-68	12	33	15' 10"	13' 10"	11' 8"	15' 0"	13' 1"	11' 1"	14' 4"	12' 7"	10' 7"
362S200-68	16	33	14' 4"	12' 7"	10' 7"	13' 8"	11' 11"	10' 1"	13' 1"	11' 5"	9' 7"
362S200-68	24	33	12' 7"	11' 0"	9' 3"	11' 11"	10' 5"	8' 9"	11' 3"	10' 0"	8' 5"
362S200-68	12	50	15' 10"	13' 10"	11' 8"	15' 0"	13' 1"	11' 1"	14' 4"	12' 7"	10' 7"
362S200-68	16	50	14' 4"	12' 7"	10' 7"	13' 8"	11' 11"	10' 1"	13' 1"	11' 5"	9' 7"
362S200-68	24	50	12' 7"	11' 0"	9' 3"	11' 11"	10' 5"	8' 9"	11' 5"	10' 0"	8' 5"
362S200-97	12	33	17' 6"	15' 3"	12' 11"	16' 7"	14' 6"	12' 3"	15' 11"	13' 11"	11' 8"
362S200-97	16	33	15' 11"	13' 11"	11' 8"	15' 1"	13' 2"	11' 1"	14' 5"	12' 7"	10' 8"
362S200-97	24	33	13' 11"	12' 1"	10' 3"	13' 2"	11' 6"	9' 9"	12' 6"	11' 0"	9' 3"
362S200-97	12	50	17' 6"	15' 3"	12' 11"	16' 7"	14' 6"	12' 3"	15' 11"	13' 11"	11' 8"
362S200-97	16	50	15' 11"	13' 11"	11' 8"	15' 1"	13' 2"	11' 1"	14' 5"	12' 7"	10' 8"
362S200-97	24	50	13' 11"	12' 1"	10' 3"	13' 2"	11' 6"	9' 9"	12' 7"	11' 0"	9' 3"
362S250-33	12	33	11' 11" e	11' 6" e	9' 8"	11' 0"	10' 11"	9' 2"	10' 4" e	10' 4"	8' 9" e
362S250-33	16	33	10' 4" e	10' 4" e	8' 9" e	9' 6" e	9' 6" e	8' 4" e	8' 11" e	8' 11"	8' 0" e
362S250-33	24	33	8' 5" e	8' 5" e	7' 8" e	7' 9" e	7' 9" e	7' 4" e	7' 3" e	7' 3" e	7' 0" e
362S250-43	12	33	14' 2"	12' 8"	10' 8"	13' 1"	12' 1"	10' 2"	12' 3"	11' 6"	9' 9"
362S250-43	16	33	12' 3"	11' 6"	9' 9"	11' 4"	10' 11"	9' 3"	10' 8" e	10' 6"	8' 10"
362S250-43	24	33	10' 0" e	10' 0" e	8' 6"	9' 3" e	9' 3" e	8' 1" e	8' 8" e	8' 8" e	7' 9" e
362S250-54	12	33	15' 7"	13' 7"	11' 6"	14' 10"	12' 11"	10' 11"	13' 11"	12' 4"	10' 5"
362S250-54	16	33	13' 11"	12' 4"	10' 5"	12' 11"	11' 9"	9' 11"	12' 1"	11' 3"	9' 6"
362S250-54	24	33	11' 4"	10' 10"	9' 1"	10' 6"	10' 3"	8' 8"	9' 10"	9' 10"	8' 3"
362S250-54	12	50	15' 6"	13' 7"	11' 5"	14' 9"	12' 11"	10' 10"	14' 1"	12' 4"	10' 5"
362S250-54	16	50	14' 1"	12' 4"	10' 5"	13' 5"	11' 8"	9' 10"	12' 10"	11' 2"	9' 5"
362S250-54	24	50	12' 4"	10' 9"	9' 1"	11' 8"	10' 3"	8' 7"	11' 2"	9' 9"	8' 3"
362S250-68	12	33	16' 8"	14' 7"	12' 4"	15' 10"	13' 10"	11' 8"	15' 2"	13' 3"	11' 2"
362S250-68	16	33	15' 2"	13' 3"	11' 2"	14' 5"	12' 7"	10' 7"	13' 9"	12' 0"	10' 2"
362S250-68	24	33	13' 3"	11' 7"	9' 9"	12' 5"	11' 0"	9' 3"	11' 8"	10' 6"	8' 10"
362S250-68	12	50	16' 8"	14' 7"	12' 4"	15' 10"	13' 10"	11' 8"	15' 2"	13' 3"	11' 2"
362S250-68	16	50	15' 2"	13' 3"	11' 2"	14' 5"	12' 7"	10' 7"	13' 9"	12' 0"	10' 2"
362S250-68	24	50	13' 3"	11' 7"	9' 9"	12' 7"	11' 0"	9' 3"	12' 0"	10' 6"	8' 10"
362S250-97	12	33	18' 6"	16' 2"	13' 8"	17' 7"	15' 4"	12' 11"	16' 10"	14' 8"	12' 5"
362S250-97	16	33	16' 10"	14' 8"	12' 5"	16' 0"	13' 11"	11' 9"	15' 3"	13' 4"	11' 3"
362S250-97	24	33	14' 8"	12' 10"	10' 10"	13' 11"	12' 2"	10' 3"	13' 4"	11' 8"	9' 10"
362S250-97	12	50	18' 6"	16' 2"	13' 8"	17' 7"	15' 4"	12' 11"	16' 10"	14' 8"	12' 5"
362S250-97	16	50	16' 10"	14' 8"	12' 5"	16' 0"	13' 11"	11' 9"	15' 3"	13' 4"	11' 3"
362S250-97	24	50	14' 8"	12' 10"	10' 10"	13' 11"	12' 2"	10' 3"	13' 4"	11' 8"	9' 10"
362S300-33	12	33	12' 0" e	11' 10" e	10' 0"	11' 1"	11' 1" e	9' 6" e	10' 5" e	10' 5"	9' 1" e
362S300-33	16	33	10' 5" e	10' 5" e	9' 1" e	9' 7" e	9' 7" e	8' 7" e	9' 0" e	9' 0" e	8' 3" e
362S300-33	24	33	8' 6" e	8' 6" e	7' 11"	7' 10"	7' 10" e	7' 6" e	7' 4" e	7' 4" e	7' 2" e
362S300-43	12	33	14' 2"	13' 2"	11' 1"	13' 2"	12' 6"	10' 6"	12' 4"	11' 11"	10' 1"
362S300-43	16	33	12' 4"	11' 11"	10' 1"	11' 5"	11' 4"	9' 7"	10' 8" e	10' 8"	9' 2"
362S300-43	24	33	10' 1" e	10' 1" e	8' 10"	9' 4" e	9' 4" e	8' 4" e	8' 8" e	8' 8" e	8' 0" e
362S300-54	12	33	16' 3"	14' 3"	12' 0"	15' 1"	13' 6"	11' 5"	14' 2"	12' 11"	10' 11"
362S300-54	16	33	14' 2"	12' 11"	10' 11"	13' 1"	12' 3"	10' 4"	12' 3"	11' 9"	9' 11"
362S300-54	24	33	11' 7"	11' 3"	9' 6"	10' 8"	10' 8"	9' 0"	10' 0"	10' 0"	8' 8"
362S300-54	12	50	15' 11"	13' 11"	11' 9"	15' 2"	13' 3"	11' 2"	14' 6"	12' 8"	10' 8"
362S300-54	16	50	14' 6"	12' 8"	10' 8"	13' 9"	12' 0"	10' 2"	13' 2"	11' 6"	9' 8"
362S300-54	24	50	12' 8"	11' 1"	9' 4"	12' 0"	10' 6"	8' 10"	11' 6"	10' 0"	8' 6"
362S300-68	12	33	17' 6"	15' 3"	12' 11"	16' 7"	14' 6"	12' 3"	15' 11"	13' 11"	11' 9"
362S300-68	16	33	15' 11"	13' 11"	11' 9"	15' 1"	13' 2"	11' 1"	14' 2"	12' 7"	10' 8"
362S300-68	24	33	13' 4"	12' 2"	10' 3"	12' 4"	11' 6"	9' 9"	11' 7"	11' 0"	9' 4"
362S300-68	12	50	17' 5"	15' 2"	12' 10"	16' 6"	14' 5"	12' 2"	15' 9"	13' 10"	11' 8"
362S300-68	16	50	15' 9"	13' 10"	11' 8"	15' 0"	13' 1"	11' 1"	14' 4"	12' 6"	10' 7"
362S300-68	24	50	13' 10"	12' 1"	10' 2"	13' 1"	11' 5"	9' 8"	12' 6"	10' 11"	9' 3"
362S300-97	12	33	19' 5"	17' 0"	14' 4"	18' 5"	16' 1"	13' 7"	17' 8"	15' 5"	13' 0"
362S300-97	16	33	17' 8"	15' 5"	13' 0"	16' 9"	14' 8"	12' 4"	16' 0"	14' 0"	11' 10"
362S300-97	24	33	15' 5"	13' 6"	11' 4"	14' 8"	12' 9"	10' 9"	14' 0"	12' 3"	10' 4"
362S300-97	12	50	19' 4"	16' 11"	14' 3"	18' 4"	16' 1"	13' 6"	17' 7"	15' 4"	12' 11"
362S300-97	16	50	17' 7"	15' 4"	12' 11"	16' 8"	14' 7"	12' 4"	16' 0"	13' 11"	11' 9"
362S300-97	24	50	15' 4"	13' 5"	11' 4"	14' 7"	12' 9"	10' 9"	13' 11"	12' 2"	10' 3"

*See Page 13 for table notes.

LIMITING WALL HEIGHTS - CURTAIN WALL (30-40 psf)

Stud Member	Spacing, in, oc	Fy, ksi	30 psf			35 psf			40 psf		
			L/240	L/360	L/600	L/240	L/360	L/600	L/240	L/360	L/600
400S250-33	12	33	12' 7" e	12' 4" e	10' 5"	11' 8" e	11' 8" e	9' 11" e	10' 11" e	10' 11" e	9' 6" e
400S250-33	16	33	10' 11" e	10' 11" e	9' 6" e	10' 1" e	10' 1" e	9' 0" e	9' 5" e	9' 5" e	8' 7" e
400S250-33	24	33	8' 11" e	8' 11" e	8' 3" e	8' 3" e	8' 3" e	7' 10" e	7' 9" e	7' 9" e	7' 6" e
400S250-43	12	33	15' 0"	13' 8"	11' 6"	13' 11"	13' 0"	10' 11"	13' 0"	12' 5"	10' 6"
400S250-43	16	33	13' 0"	12' 5"	10' 6"	12' 1" e	11' 9" e	9' 11"	11' 3" e	11' 3" e	9' 6"
400S250-43	24	33	10' 8" e	10' 8" e	9' 2" e	9' 10" e	9' 10" e	8' 8" e	9' 2" e	9' 2" e	8' 4" e
400S250-54	12	33	16' 9"	14' 8"	12' 4"	15' 10"	13' 11"	11' 9"	14' 10"	13' 4"	11' 3"
400S250-54	16	33	14' 10"	13' 4"	11' 3"	13' 8"	12' 8"	10' 8"	12' 10"	12' 1"	10' 2"
400S250-54	24	33	12' 1"	11' 8"	9' 10"	11' 2"	11' 1"	9' 4"	10' 6" e	10' 6" e	8' 11"
400S250-54	12	50	16' 9"	14' 7"	12' 4"	15' 11"	13' 10"	11' 8"	15' 2"	13' 3"	11' 2"
400S250-54	16	50	15' 2"	13' 3"	11' 2"	14' 5"	12' 7"	10' 8"	13' 10"	12' 1"	10' 2"
400S250-54	24	50	13' 3"	11' 7"	9' 9"	12' 7"	11' 0"	9' 3"	12' 1"	10' 6"	8' 11"
400S250-68	12	33	18' 0"	15' 9"	13' 3"	17' 1"	14' 11"	12' 7"	16' 4"	14' 3"	12' 1"
400S250-68	16	33	16' 4"	14' 3"	12' 1"	15' 6"	13' 7"	11' 5"	14' 10"	13' 0"	10' 11"
400S250-68	24	33	14' 3"	12' 6"	10' 6"	13' 3"	11' 10"	10' 0"	12' 5"	11' 4"	9' 7"
400S250-68	12	50	18' 0"	15' 9"	13' 3"	17' 1"	14' 11"	12' 7"	16' 4"	14' 3"	12' 1"
400S250-68	16	50	16' 4"	14' 3"	12' 1"	15' 6"	13' 7"	11' 5"	14' 10"	13' 0"	10' 11"
400S250-68	24	50	14' 3"	12' 6"	10' 6"	13' 7"	11' 10"	10' 0"	13' 0"	11' 4"	9' 7"
400S250-97	12	33	19' 11"	17' 5"	14' 8"	18' 11"	16' 7"	14' 0"	18' 1"	15' 10"	13' 4"
400S250-97	16	33	18' 1"	15' 10"	13' 4"	17' 3"	15' 0"	12' 8"	16' 6"	14' 5"	12' 2"
400S250-97	24	33	15' 10"	13' 10"	11' 8"	15' 0"	13' 2"	11' 1"	14' 5"	12' 7"	10' 7"
400S250-97	12	50	19' 11"	17' 5"	14' 8"	18' 11"	16' 7"	14' 0"	18' 1"	15' 10"	13' 4"
400S250-97	16	50	18' 1"	15' 10"	13' 4"	17' 3"	15' 0"	12' 8"	16' 6"	14' 5"	12' 2"
400S250-97	24	50	15' 10"	13' 10"	11' 8"	15' 0"	13' 2"	11' 1"	14' 5"	12' 7"	10' 7"
400S300-33	12	33	12' 8" e	12' 8" e	10' 9"	11' 9" e	11' 9" e	10' 2" e	11' 0" e	11' 0" e	9' 9" e
400S300-33	16	33	11' 0" e	11' 0" e	9' 9" e	10' 2" e	10' 2" e	9' 3" e	9' 6" e	9' 6" e	8' 10" e
400S300-33	24	33	9' 0" e	9' 0" e	8' 6" e	8' 4" e	8' 4" e	8' 1" e	7' 9" e	7' 9" e	7' 9" e
400S300-43	12	33	15' 0"	14' 2"	11' 11"	13' 11"	13' 5"	11' 4"	13' 0"	12' 10"	10' 10"
400S300-43	16	33	13' 0"	12' 10"	10' 10"	12' 0" e	12' 0" e	10' 3"	11' 3" e	11' 3" e	9' 10"
400S300-43	24	33	10' 7" e	10' 7" e	9' 5" e	9' 10" e	9' 10" e	9' 0" e	9' 2" e	9' 2" e	8' 7" e
400S300-54	12	33	17' 3"	15' 3"	12' 11"	16' 0"	14' 6"	12' 3"	15' 0"	13' 11"	11' 9"
400S300-54	16	33	15' 0"	13' 11"	11' 9"	13' 10"	13' 2"	11' 2"	13' 0"	12' 7"	10' 8"
400S300-54	24	33	12' 3"	12' 2"	10' 3"	11' 4"	11' 4"	9' 9"	10' 7" e	10' 7" e	9' 4"
400S300-54	12	50	17' 2"	15' 0"	12' 8"	16' 3"	14' 3"	12' 0"	15' 7"	13' 7"	11' 6"
400S300-54	16	50	15' 7"	13' 7"	11' 6"	14' 9"	12' 11"	10' 11"	14' 2"	12' 4"	10' 5"
400S300-54	24	50	13' 7"	11' 11"	10' 0"	12' 11"	11' 3"	9' 6"	12' 2"	10' 10"	9' 1"
400S300-68	12	33	18' 10"	16' 5"	13' 10"	17' 11"	15' 7"	13' 2"	17' 1"	14' 11"	12' 7"
400S300-68	16	33	17' 1"	14' 11"	12' 7"	16' 1"	14' 2"	12' 0"	15' 0"	13' 7"	11' 5"
400S300-68	24	33	14' 2"	13' 1"	11' 0"	13' 1"	12' 5"	10' 6"	12' 3"	11' 10"	10' 0"
400S300-68	12	50	18' 8"	16' 4"	13' 9"	17' 9"	15' 6"	13' 1"	17' 0"	14' 10"	12' 6"
400S300-68	16	50	17' 0"	14' 10"	12' 6"	16' 2"	14' 1"	11' 11"	15' 5"	13' 6"	11' 4"
400S300-68	24	50	14' 10"	13' 0"	10' 11"	14' 1"	12' 4"	10' 5"	13' 6"	11' 9"	9' 11"
400S300-97	12	33	20' 11"	18' 3"	15' 5"	19' 10"	17' 4"	14' 8"	19' 0"	16' 7"	14' 0"
400S300-97	16	33	19' 0"	16' 7"	14' 0"	18' 1"	15' 9"	13' 4"	17' 3"	15' 1"	12' 9"
400S300-97	24	33	16' 7"	14' 6"	12' 3"	15' 9"	13' 9"	11' 7"	15' 1"	13' 2"	11' 1"
400S300-97	12	50	20' 10"	18' 2"	15' 4"	19' 9"	17' 3"	14' 7"	18' 11"	16' 6"	13' 11"
400S300-97	16	50	18' 11"	16' 6"	13' 11"	18' 0"	15' 8"	13' 3"	17' 2"	15' 0"	12' 8"
400S300-97	24	50	16' 6"	14' 5"	12' 2"	15' 8"	13' 9"	11' 7"	15' 0"	13' 1"	11' 1"

*See Page 13 for table notes.

LIMITING WALL HEIGHTS - CURTAIN WALL (30-40 psf)

Stud Member	Spacing, in, oc	Fy, ksi	30 psf			35 psf			40 psf		
			L/240	L/360	L/600	L/240	L/360	L/600	L/240	L/360	L/600
600S250-43	12	33	19' 0" e	18' 7" e	15' 8"	17' 7" e	17' 7" e	14' 11" e	16' 5" e	16' 5" e	14' 3" e
600S250-43	16	33	16' 5" e	16' 5" e	14' 3" e	15' 3" e	15' 3" e	13' 6" e	14' 3" e	14' 3" e	12' 11" e
600S250-43	24	33	13' 5" e	13' 5" e	12' 5" e	12' 5" e	12' 5" e	11' 10" e	11' 7" e	11' 7" e	11' 4" e
600S250-54	12	33	22' 1"	19' 11"	16' 10"	20' 5"	18' 11"	16' 0"	19' 1"	18' 2"	15' 4"
600S250-54	16	33	19' 1"	18' 2"	15' 4"	17' 8" e	17' 3" e	14' 6"	16' 7" e	16' 6" e	13' 11"
600S250-54	24	33	15' 7" e	15' 7" e	13' 4" e	14' 5" e	14' 5" e	12' 8" e	13' 6" e	13' 6" e	12' 2" e
600S250-54	12	50	22' 9"	19' 10"	16' 9"	21' 7"	18' 10"	15' 11"	20' 8"	18' 1"	15' 3"
600S250-54	16	50	20' 8"	18' 1"	15' 3"	19' 7"	17' 2"	14' 6"	18' 9"	16' 5"	13' 10"
600S250-54	24	50	17' 10"	15' 9"	13' 4"	16' 6"	15' 0"	12' 8"	15' 6" e	14' 4"	12' 1"
600S250-68	12	33	24' 6"	21' 5"	18' 1"	23' 4"	20' 4"	17' 2"	22' 3"	19' 6"	16' 5"
600S250-68	16	33	22' 3"	19' 6"	16' 5"	21' 2"	18' 6"	15' 7"	19' 10"	17' 8"	14' 11"
600S250-68	24	33	18' 9"	17' 0"	14' 4"	17' 4" e	16' 2"	13' 8"	16' 2" e	15' 5" e	13' 0"
600S250-68	12	50	24' 6"	21' 5"	18' 1"	23' 4"	20' 4"	17' 2"	22' 3"	19' 6"	16' 5"
600S250-68	16	50	22' 3"	19' 6"	16' 5"	21' 2"	18' 6"	15' 7"	20' 3"	17' 8"	14' 11"
600S250-68	24	50	19' 6"	17' 0"	14' 4"	18' 6"	16' 2"	13' 7"	17' 8"	15' 5"	13' 0"
600S250-97	12	33	27' 3"	23' 10"	20' 1"	25' 11"	22' 8"	19' 1"	24' 9"	21' 8"	18' 3"
600S250-97	16	33	24' 9"	21' 8"	18' 3"	23' 6"	20' 7"	17' 4"	22' 6"	19' 8"	16' 7"
600S250-97	24	33	21' 8"	18' 11"	15' 11"	20' 7"	18' 0"	15' 2"	19' 8"	17' 2"	14' 6"
600S250-97	12	50	27' 3"	23' 10"	20' 1"	25' 11"	22' 8"	19' 1"	24' 9"	21' 8"	18' 3"
600S250-97	16	50	24' 9"	21' 8"	18' 3"	23' 6"	20' 7"	17' 4"	22' 6"	19' 8"	16' 7"
600S250-97	24	50	21' 8"	18' 11"	15' 11"	20' 7"	18' 0"	15' 2"	19' 8"	17' 2"	14' 6"
600S300-54	12	33	22' 6"	20' 9"	17' 6"	20' 10"	19' 8"	16' 7"	19' 6"	18' 10"	15' 10"
600S300-54	16	33	19' 6"	18' 10"	15' 10"	18' 1" e	17' 10" e	15' 1"	16' 11" e	16' 11" e	14' 5"
600S300-54	24	33	15' 11" e	15' 11" e	13' 10" e	14' 9" e	14' 9" e	13' 2" e	13' 9" e	13' 9" e	12' 7" e
600S300-54	12	50	23' 3"	20' 3"	17' 1"	22' 1"	19' 3"	16' 3"	21' 1"	18' 5"	15' 7"
600S300-54	16	50	21' 1"	18' 5"	15' 7"	20' 1"	17' 6"	14' 9"	19' 2"	16' 9"	14' 2"
600S300-54	24	50	18' 2"	16' 1"	13' 7"	16' 10"	15' 4"	12' 11"	15' 9" e	14' 8"	12' 4"
600S300-68	12	33	25' 7"	22' 4"	18' 10"	24' 3"	21' 2"	17' 11"	22' 8"	20' 3"	17' 1"
600S300-68	16	33	22' 8"	20' 3"	17' 1"	21' 0"	19' 3"	16' 3"	19' 8"	18' 5"	15' 6"
600S300-68	24	33	18' 6"	17' 9"	14' 11"	17' 2"	16' 10"	14' 2"	16' 1" e	16' 1" e	13' 7"
600S300-68	12	50	25' 4"	22' 2"	18' 8"	24' 1"	21' 0"	17' 9"	23' 0"	20' 2"	17' 0"
600S300-68	16	50	23' 0"	20' 2"	17' 0"	21' 11"	19' 1"	16' 1"	20' 11"	18' 3"	15' 5"
600S300-68	24	50	20' 2"	17' 7"	14' 10"	19' 1"	16' 8"	14' 1"	18' 3"	16' 0"	13' 6"
600S300-97	12	33	28' 5"	24' 10"	21' 0"	27' 0"	23' 7"	19' 11"	25' 10"	22' 7"	19' 1"
600S300-97	16	33	25' 10"	22' 7"	19' 1"	24' 7"	21' 5"	18' 1"	23' 6"	20' 6"	17' 4"
600S300-97	24	33	22' 7"	19' 9"	16' 8"	21' 5"	18' 9"	15' 10"	20' 6"	17' 11"	15' 1"
600S300-97	12	50	28' 4"	24' 9"	20' 10"	26' 11"	23' 6"	19' 10"	25' 9"	22' 6"	19' 0"
600S300-97	16	50	25' 9"	22' 6"	19' 0"	24' 5"	21' 4"	18' 0"	23' 5"	20' 5"	17' 3"
600S300-97	24	50	22' 6"	19' 8"	16' 7"	21' 4"	18' 8"	15' 9"	20' 5"	17' 10"	15' 1"
600S350-54	12	33	24' 10"	21' 8"	18' 4"	23' 1" e	20' 7"	17' 5"	21' 7" e	19' 9"	16' 8"
600S350-54	16	33	21' 7" e	19' 9"	16' 8"	20' 0" e	18' 9" e	15' 10"	18' 8" e	17' 11" e	15' 1" e
600S350-54	24	33	17' 8" e	17' 3" e	14' 6" e	16' 4" e	16' 4" e	13' 10" e	15' 3" e	15' 3" e	13' 2" e

LIMITING WALL HEIGHTS - CURTAIN WALL (30-40 psf)

Stud Member	Spacing, in, oc	Fy, ksi	30 psf			35 psf			40 psf		
			L/240	L/360	L/600	L/240	L/360	L/600	L/240	L/360	L/600
800S250-43	12	33	22' 2" e	22' 2" e	19' 7" e	20' 6" e	20' 6" e	18' 7" e	19' 2" e	19' 2" e	17' 10" e
800S250-43	16	33	19' 2" e	19' 2" e	17' 10" e	17' 9" e	17' 9" e	16' 11" e	16' 7" e	16' 7" e	16' 2" e
800S250-43	24	33	15' 8" e	15' 8" e	15' 7" e	14' 6" e	14' 6" e	14' 6" e	13' 7" e	13' 7" e	13' 7" e
800S250-54	12	33	25' 10" e	24' 11"	21' 1"	23' 11" e	23' 8" e	20' 0"	22' 5" e	22' 5" e	19' 1" e
800S250-54	16	33	22' 5" e	22' 5" e	19' 1" e	20' 9" e	20' 9" e	18' 2" e	19' 5" e	19' 5" e	17' 4" e
800S250-54	24	33	18' 3" e	18' 3" e	16' 8" e	16' 11" e	16' 11" e	15' 10" e	15' 10" e	15' 10" e	15' 2" e
800S250-54	12	50	28' 5"	24' 10"	21' 0"	27' 0"	23' 7"	19' 11"	25' 7"	22' 7"	19' 1"
800S250-54	16	50	25' 7"	22' 7"	19' 1"	23' 8"	21' 5"	18' 1"	22' 1" e	20' 6"	17' 4"
800S250-54	24	50	20' 10" e	19' 9" e	16' 8"	19' 4" e	18' 9" e	15' 10"	18' 1" e	17' 11" e	15' 1" e
800S250-68	12	33	30' 8"	26' 10"	22' 7"	28' 10"	25' 6"	21' 6"	27' 0"	24' 4"	20' 7"
800S250-68	16	33	27' 0"	24' 4"	20' 7"	25' 0" e	23' 2"	19' 6"	23' 4" e	22' 2" e	18' 8"
800S250-68	24	33	22' 0" e	21' 3" e	17' 11"	20' 5" e	20' 3" e	17' 1" e	19' 1" e	19' 1" e	16' 4" e
800S250-68	12	50	30' 8"	26' 10"	22' 7"	29' 2"	25' 5"	21' 6"	27' 10"	24' 4"	20' 6"
800S250-68	16	50	27' 10"	24' 4"	20' 6"	26' 6"	23' 1"	19' 6"	25' 4"	22' 1"	18' 8"
800S250-68	24	50	24' 4"	21' 3"	17' 11"	22' 8"	20' 2"	17' 0"	21' 2"	19' 4"	16' 4"
800S250-97	12	33	34' 2"	29' 10"	25' 2"	32' 6"	28' 4"	23' 11"	31' 1"	27' 2"	22' 11"
800S250-97	16	33	31' 1"	27' 2"	22' 11"	29' 6"	25' 9"	21' 9"	28' 3"	24' 8"	20' 9"
800S250-97	24	33	27' 2"	23' 8"	20' 0"	25' 9"	22' 6"	19' 0"	24' 3"	21' 6"	18' 2"
800S250-97	12	50	34' 2"	29' 10"	25' 2"	32' 6"	28' 4"	23' 11"	31' 1"	27' 2"	22' 11"
800S250-97	16	50	31' 1"	27' 2"	22' 11"	29' 6"	25' 9"	21' 9"	28' 3"	24' 8"	20' 9"
800S250-97	24	50	27' 2"	23' 8"	20' 0"	25' 9"	22' 6"	19' 0"	24' 8"	21' 6"	18' 2"
800S300-54	12	33	26' 4" e	25' 10" e	21' 9"	24' 4" e	24' 4" e	20' 8"	22' 9" e	22' 9" e	19' 9" e
800S300-54	16	33	22' 9" e	22' 9" e	19' 9" e	21' 1" e	21' 1" e	18' 9" e	19' 9" e	19' 9" e	18' 0" e
800S300-54	24	33	18' 7" e	18' 7" e	17' 3" e	17' 3" e	17' 3" e	16' 5" e	16' 1" e	16' 1" e	15' 8" e
800S300-54	12	50	29' 1"	25' 5"	21' 5"	27' 7"	24' 1"	20' 4"	25' 11"	23' 1"	19' 5"
800S300-54	16	50	25' 11"	23' 1"	19' 5"	24' 0"	21' 11"	18' 6"	22' 5" e	20' 11"	17' 8"
800S300-54	24	50	21' 2" e	20' 2" e	17' 0"	19' 7" e	19' 2" e	16' 2"	18' 4" e	18' 4" e	15' 5" e
800S300-68	12	33	30' 9"	27' 10"	23' 6"	28' 6"	26' 5"	22' 4"	26' 8"	25' 3"	21' 4"
800S300-68	16	33	26' 8"	25' 3"	21' 4"	24' 8"	24' 0"	20' 3"	23' 1" e	23' 0" e	19' 4"
800S300-68	24	33	21' 9" e	21' 9" e	18' 8"	20' 2" e	20' 2" e	17' 8" e	18' 10" e	18' 10" e	16' 11" e
800S300-68	12	50	31' 7"	27' 7"	23' 3"	30' 0"	26' 2"	22' 1"	28' 8"	25' 1"	21' 2"
800S300-68	16	50	28' 8"	25' 1"	21' 2"	27' 3"	23' 10"	20' 1"	26' 1"	22' 9"	19' 2"
800S300-68	24	50	24' 10"	21' 11"	18' 6"	23' 0"	20' 10"	17' 6"	21' 6"	19' 11"	16' 9"
800S300-97	12	33	35' 6"	31' 1"	26' 2"	33' 9"	29' 6"	24' 10"	32' 3"	28' 2"	23' 9"
800S300-97	16	33	32' 3"	28' 2"	23' 9"	30' 8"	26' 10"	22' 7"	29' 4"	25' 8"	21' 7"
800S300-97	24	33	28' 2"	24' 8"	20' 9"	26' 5"	23' 5"	19' 9"	24' 9"	22' 5"	18' 11"
800S300-97	12	50	35' 4"	30' 11"	26' 1"	33' 7"	29' 4"	24' 9"	32' 2"	28' 1"	23' 8"
800S300-97	16	50	32' 2"	28' 1"	23' 8"	30' 6"	26' 8"	22' 6"	29' 2"	25' 6"	21' 6"
800S300-97	24	50	28' 1"	24' 6"	20' 8"	26' 8"	23' 4"	19' 8"	25' 6"	22' 3"	18' 10"
800S350-54	12	33	29' 2" e	27' 0" e	22' 9"	27' 0" e	25' 8" e	21' 8"	25' 3" e	24' 7" e	20' 8" e
800S350-54	16	33	25' 3" e	24' 7" e	20' 8" e	23' 5" e	23' 4" e	19' 8" e	21' 11" e	21' 11" e	18' 10" e
800S350-54	24	33	20' 8" e	20' 8" e	18' 1" e	19' 1" e	19' 1" e	17' 2" e	17' 10" e	17' 10" e	16' 5" e
800S350-54	12	50	30' 7"	26' 9"	22' 7"	29' 1"	25' 5"	21' 5"	27' 10"	24' 4"	20' 6"
800S350-54	16	50	27' 10"	24' 4"	20' 6"	26' 5" e	23' 1"	19' 6"	24' 11" e	22' 1" e	18' 7"
800S350-54	24	50	23' 6" e	21' 3" e	17' 11"	21' 9" e	20' 2" e	17' 0" e	20' 4" e	19' 3" e	16' 3" e
800S350-68	12	33	33' 6"	29' 3"	24' 8"	31' 5"	27' 10"	23' 5"	29' 5" e	26' 7"	22' 5"
800S350-68	16	33	29' 5" e	26' 7"	22' 5"	27' 3" e	25' 3" e	21' 4"	25' 6" e	24' 2" e	20' 5"
800S350-68	24	33	24' 0" e	23' 3" e	19' 7" e	22' 3" e	22' 1" e	18' 7" e	20' 10" e	20' 10" e	17' 10" e
800S350-68	12	50	33' 5"	29' 2"	24' 7"	31' 8"	27' 8"	23' 4"	30' 4"	26' 6"	22' 4"
800S350-68	16	50	30' 4"	26' 6"	22' 4"	28' 10"	25' 2"	21' 3"	27' 7"	24' 1"	20' 4"
800S350-68	24	50	26' 6"	23' 2"	19' 6"	25' 2"	22' 0"	18' 6"	23' 10" e	21' 0"	17' 9"
800S350-97	12	33	37' 5"	32' 8"	27' 7"	35' 6"	31' 0"	26' 2"	34' 0"	29' 8"	25' 0"
800S350-97	16	33	34' 0"	29' 8"	25' 0"	32' 3"	28' 2"	23' 9"	30' 10"	27' 0"	22' 9"
800S350-97	24	33	29' 8"	25' 11"	21' 10"	28' 2"	24' 7"	20' 9"	27' 0"	23' 7"	19' 10"
800S350-97	12	50	37' 5"	32' 8"	27' 7"	35' 6"	31' 0"	26' 2"	34' 0"	29' 8"	25' 0"
800S350-97	16	50	34' 0"	29' 8"	25' 0"	32' 3"	28' 2"	23' 9"	30' 10"	27' 0"	22' 9"
800S350-97	24	50	29' 8"	25' 11"	21' 10"	28' 2"	24' 7"	20' 9"	27' 0"	23' 7"	19' 10"

*See Page 13 for table notes.

LIMITING WALL HEIGHTS - CURTAIN WALL (30-40 psf)

Stud Member	Spacing, in, oc	30 psf			35 psf			40 psf		
		L/240	L/360	L/600	L/240	L/360	L/600	L/240	L/360	L/600
1000S162-43	12	22' 0" e	22' 0" e	21' 1" e	20' 5" e	20' 5" e	20' 1" e	19' 1" e	19' 1" e	19' 1" e
1000S162-43	16	19' 1" e	19' 1" e	19' 1" e	17' 8" e	17' 8" e	17' 8" e	16' 6" e	16' 6" e	16' 6" e
1000S162-43	24	15' 7" e	15' 7" e	15' 7" e	14' 5" e	14' 5" e	14' 5" e	13' 6" e	13' 6" e	13' 6" e
1000S162-54	12	29' 5"	26' 11"	22' 9"	27' 3"	25' 7"	21' 7"	25' 6"	24' 6"	20' 8"
1000S162-54	16	25' 6"	24' 6"	20' 8"	23' 7" e	23' 3" e	19' 7"	22' 1" e	22' 1" e	18' 9"
1000S162-54	24	20' 10" e	20' 10" e	18' 0" e	19' 3" e	19' 3" e	17' 2" e	18' 0" e	18' 0" e	16' 5" e
1000S162-68	12	33' 5"	29' 3"	24' 8"	31' 9"	27' 9"	23' 5"	30' 1"	26' 6"	22' 5"
1000S162-68	16	30' 1"	26' 6"	22' 5"	27' 10"	25' 3"	21' 3"	26' 0"	24' 1"	20' 4"
1000S162-68	24	24' 6"	23' 2"	19' 7"	22' 9"	22' 0"	18' 7"	21' 3" e	21' 1" e	17' 9"
1000S162-97	12	37' 7"	32' 10"	27' 8"	35' 8"	31' 2"	26' 3"	34' 1"	29' 10"	25' 2"
1000S162-97	16	34' 1"	29' 10"	25' 2"	32' 5"	28' 4"	23' 11"	31' 0"	27' 1"	22' 10"
1000S162-97	24	29' 10"	26' 0"	22' 0"	28' 4"	24' 9"	20' 10"	27' 1"	23' 8"	19' 11"
1000S200-43	12	23' 10" e	23' 10" e	22' 1" e	22' 0" e	22' 0" e	21' 0" e	20' 7" e	20' 7" e	20' 1" e
1000S200-43	16	20' 7" e	20' 7" e	20' 1" e	19' 1" e	19' 1" e	19' 1" e	17' 10" e	17' 10" e	17' 10" e
1000S200-43	24	16' 10" e	16' 10" e	16' 10" e	15' 7" e	15' 7" e	15' 7" e	14' 7" e	14' 7" e	14' 7" e
1000S200-54	12	31' 9"	28' 2"	23' 9"	29' 4"	26' 9"	22' 7"	27' 6" e	25' 7"	21' 7"
1000S200-54	16	27' 6" e	25' 7"	21' 7"	25' 5" e	24' 4" e	20' 6"	23' 9" e	23' 3" e	19' 8" e
1000S200-54	24	22' 5" e	22' 5" e	18' 10" e	20' 9" e	20' 9" e	17' 11" e	19' 5" e	19' 5" e	17' 2" e
1000S200-68	12	34' 11"	30' 6"	25' 9"	33' 2"	29' 0"	24' 5"	31' 9"	27' 9"	23' 5"
1000S200-68	16	31' 9"	27' 9"	23' 5"	29' 11"	26' 4"	22' 3"	27' 11"	25' 2"	21' 3"
1000S200-68	24	26' 4"	24' 3"	20' 5"	24' 5" e	23' 0"	19' 5"	22' 10" e	22' 0" e	18' 7"
1000S200-97	12	39' 3"	34' 3"	28' 11"	37' 3"	32' 7"	27' 5"	35' 8"	31' 2"	26' 3"
1000S200-97	16	35' 8"	31' 2"	26' 3"	33' 10"	29' 7"	24' 11"	32' 5"	28' 3"	23' 10"
1000S200-97	24	31' 2"	27' 2"	22' 11"	29' 7"	25' 10"	21' 9"	28' 3"	24' 9"	20' 10"
1000S250-43	12	24' 6" e	24' 6" e	23' 4" e	22' 8" e	22' 8" e	22' 2" e	21' 3" e	21' 3" e	21' 3" e
1000S250-43	16	21' 3" e	21' 3" e	21' 3" e	19' 8" e	19' 8" e	19' 8" e	18' 4" e	18' 4" e	18' 4" e
1000S250-43	24	17' 4" e	17' 4" e	17' 4" e	16' 0" e	16' 0" e	16' 0" e	15' 0" e	15' 0" e	15' 0" e
1000S250-54	12	32' 7"	29' 9"	25' 1"	30' 2" e	28' 3"	23' 10"	28' 3" e	27' 0" e	22' 10"
1000S250-54	16	28' 3" e	27' 0" e	22' 10"	26' 2" e	25' 8" e	21' 8"	24' 5" e	24' 5" e	20' 9" e
1000S250-54	24	23' 1" e	23' 1" e	19' 11" e	21' 4" e	21' 4" e	18' 11" e	19' 11" e	19' 11" e	18' 1" e
1000S250-68	12	36' 8"	32' 0"	27' 0"	34' 10"	30' 5"	25' 8"	33' 2"	29' 1"	24' 6"
1000S250-68	16	33' 2"	29' 1"	24' 6"	30' 9"	27' 7"	23' 4"	28' 9"	26' 5"	22' 3"
1000S250-68	24	27' 1" e	25' 5"	21' 5"	25' 1" e	24' 1" e	20' 4"	23' 6" e	23' 1" e	19' 6"
1000S250-97	12	40' 10"	35' 8"	30' 1"	38' 10"	33' 11"	28' 7"	37' 1"	32' 5"	27' 4"
1000S250-97	16	37' 1"	32' 5"	27' 4"	35' 3"	30' 10"	26' 0"	33' 9"	29' 5"	24' 10"
1000S250-97	24	32' 5"	28' 4"	23' 11"	30' 10"	26' 11"	22' 8"	29' 5"	25' 9"	21' 8"
1000S300-54	12	33' 1"	30' 4"	25' 7"	30' 8" e	28' 10"	24' 4"	28' 8" e	27' 7" e	23' 3"
1000S300-54	16	28' 8" e	27' 7" e	23' 3"	26' 7" e	26' 2" e	22' 1"	24' 10" e	24' 10" e	21' 2" e
1000S300-54	24	23' 5" e	23' 5" e	20' 4" e	21' 8" e	21' 8" e	19' 4" e	20' 3" e	20' 3" e	18' 6" e
1000S300-68	12	37' 8"	32' 11"	27' 9"	35' 9"	31' 3"	26' 4"	33' 9"	29' 11"	25' 2"
1000S300-68	16	33' 9"	29' 11"	25' 2"	31' 3"	28' 5"	23' 11"	29' 3"	27' 2"	22' 11"
1000S300-68	24	27' 7" e	26' 1"	22' 0"	25' 6" e	24' 10" e	20' 11"	23' 10" e	23' 9" e	20' 0"
1000S300-97	12	42' 2"	36' 10"	31' 1"	40' 0"	35' 0"	29' 6"	38' 3"	33' 5"	28' 3"
1000S300-97	16	38' 3"	33' 5"	28' 3"	36' 4"	31' 9"	26' 10"	34' 9"	30' 5"	25' 8"
1000S300-97	24	33' 5"	29' 3"	24' 8"	31' 9"	27' 9"	23' 5"	30' 5"	26' 7"	22' 5"

***See Page 13 for table notes.**

12” LIMITING WALL HEIGHTS - CURTAIN WALL (30-40 psf)

			30 psf			35 psf			40 psf		
Stud Member	Spacing, in, oc	L/600	L/240	L/360	L/600	L/240	L/360	L/600	L/240	L/360	L/600
1200S162-54	12	27' 9"	31' 8"	31' 0"	26' 2"	29' 4" e	29' 4" e	24' 10"	27' 5" e	27' 5" e	23' 9"
1200S162-54	16	25' 3"	27' 5" e	27' 5" e	23' 9"	25' 5" e	25' 5" e	22' 7" e	23' 9" e	23' 9" e	21' 7" e
1200S162-54	24	22' 1" e	22' 5" e	22' 5" e	20' 9" e	20' 9" e	20' 9" e	19' 8" e	19' 5" e	19' 5" e	18' 10" e
1200S162-68	12	30' 2"	37' 8"	33' 8"	28' 5"	34' 10"	32' 0"	27' 0"	32' 7"	30' 7"	25' 10"
1200S162-68	16	27' 5"	32' 7"	30' 7"	25' 10"	30' 2"	29' 1"	24' 6"	28' 3"	27' 10"	23' 6"
1200S162-68	24	24' 0"	26' 7" e	26' 7" e	22' 7"	24' 8" e	24' 8" e	21' 5"	23' 0" e	23' 0" e	20' 6" e
1200S162-97	12	34' 3"	43' 8"	38' 2"	32' 2"	41' 6"	36' 3"	30' 7"	39' 8"	34' 8"	29' 3"
1200S162-97	16	31' 1"	39' 8"	34' 8"	29' 3"	37' 9"	32' 11"	27' 9"	36' 1"	31' 6"	26' 7"
1200S162-97	24	27' 2"	34' 5"	30' 4"	25' 7"	31' 10"	28' 9"	24' 3"	29' 10"	27' 6"	23' 3"
1200S200-54	12	29' 0"	34' 5" e	32' 5"	27' 4"	31' 10" e	30' 9" e	25' 11"	29' 10" e	29' 5" e	24' 10"
1200S200-54	16	26' 5"	29' 10" e	29' 5" e	24' 10"	27' 7" e	27' 7" e	23' 7" e	25' 10" e	25' 10" e	22' 7" e
1200S200-54	24	23' 1" e	24' 4" e	24' 4" e	21' 8" e	22' 6" e	22' 6" e	20' 7" e	21' 1" e	21' 1" e	19' 8" e
1200S200-68	12	31' 6"	40' 3"	35' 2"	29' 8"	37' 8"	33' 5"	28' 2"	35' 2"	31' 11"	26' 11"
1200S200-68	16	28' 7"	35' 2"	31' 11"	26' 11"	32' 7"	30' 4"	25' 7"	30' 6" e	29' 0"	24' 6"
1200S200-68	24	25' 0"	28' 9" e	27' 11" e	23' 6"	26' 7" e	26' 6" e	22' 4"	24' 11" e	24' 11" e	21' 5" e
1200S200-97	12	35' 8"	45' 6"	39' 9"	33' 6"	43' 3"	37' 9"	31' 10"	41' 4"	36' 1"	30' 6"
1200S200-97	16	32' 4"	41' 4"	36' 1"	30' 6"	39' 3"	34' 4"	28' 11"	37' 7"	32' 10"	27' 8"
1200S200-97	24	28' 3"	36' 1"	31' 7"	26' 7"	34' 2"	30' 0"	25' 3"	32' 0"	28' 8"	24' 2"
1200S250-54	12	30' 3"	35' 7" e	33' 9" e	28' 5"	32' 11" e	32' 0" e	27' 0"	30' 10" e	30' 8" e	25' 10" e
1200S250-54	16	27' 6"	30' 10" e	30' 8" e	25' 10" e	28' 6" e	28' 6" e	24' 7" e	26' 8" e	26' 8" e	23' 6" e
1200S250-54	24	24' 0" e	25' 2" e	25' 2" e	22' 7" e	23' 3" e	23' 3" e	21' 5" e	21' 9" e	21' 9" e	20' 6" e
1200S250-68	12	32' 10"	41' 11"	36' 7"	30' 11"	38' 10"	34' 9"	29' 4"	36' 4"	33' 3"	28' 1"
1200S250-68	16	29' 10"	36' 4"	33' 3"	28' 1"	33' 8" e	31' 7"	26' 8"	31' 6" e	30' 3" e	25' 6"
1200S250-68	24	26' 1"	29' 8" e	29' 1" e	24' 6"	27' 6" e	27' 6" e	23' 3" e	25' 9" e	25' 9" e	22' 3" e
1200S250-97	12	37' 0"	47' 3"	41' 4"	34' 10"	44' 11"	39' 3"	33' 1"	42' 11"	37' 6"	31' 8"
1200S250-97	16	33' 8"	42' 11"	37' 6"	31' 8"	40' 10"	35' 8"	30' 1"	39' 0"	34' 1"	28' 9"
1200S250-97	24	29' 5"	37' 6"	32' 9"	27' 8"	35' 4"	31' 2"	26' 3"	33' 1"	29' 9"	25' 1"
1200S300-54	12	31' 7"	36' 3" e	35' 3" e	29' 9"	33' 7" e	33' 6" e	28' 3"	31' 5" e	31' 5" e	27' 0" e
1200S300-54	16	28' 8"	31' 5" e	31' 5" e	27' 0" e	29' 1" e	29' 1" e	25' 8" e	27' 2" e	27' 2" e	24' 7" e
1200S300-54	24	25' 1" e	25' 8" e	25' 8" e	23' 7" e	23' 9" e	23' 9" e	22' 5" e	22' 2" e	22' 2" e	21' 5" e
1200S300-68	12	34' 1"	42' 10"	38' 1"	32' 1"	39' 8"	36' 2"	30' 6"	37' 1"	34' 7"	29' 2"
1200S300-68	16	31' 0"	37' 1"	34' 7"	29' 2"	34' 4" e	32' 10"	27' 9"	32' 1" e	31' 5" e	26' 6"
1200S300-68	24	27' 1"	30' 3" e	30' 3" e	25' 6"	28' 0" e	28' 0" e	24' 2" e	26' 3" e	26' 3" e	23' 2" e
1200S300-97	12	38' 2"	48' 9"	42' 7"	35' 11"	46' 4"	40' 5"	34' 1"	44' 3"	38' 8"	32' 8"
1200S300-97	16	34' 8"	44' 3"	38' 8"	32' 8"	42' 1"	36' 9"	31' 0"	40' 3"	35' 2"	29' 8"
1200S300-97	24	30' 3"	38' 8"	33' 10"	28' 6"	36' 1"	32' 1"	27' 1"	33' 9"	30' 8"	25' 11"

*See Page 13 for table notes.

COMBINED AXIAL AND LATERAL LOAD TABLES

5 psf Lateral Load (Interior Walls Only)																					
Wall	Spacing	362S162-(mils)					362S200-(mils)					400S162-(mils)					400S200-(mils)				
Height	(in.)	33 ksi		50 ksi			33 ksi		50 ksi			33 ksi		50 ksi			33 ksi		50 ksi		
(ft)	o.c.	33	43	54	68	97	33	43	54	68	97	33	43	54	68	97	33	43	54	68	97
8	12	1.87 a	2.65 a	4.15 a	5.38 a	7.87 a	2.25 a	3.28 a	5.18 a	6.68 a	9.54 a	2.03 a	2.87 a	4.62 a	6.18 a	9.08 a	2.42 a	3.55 a	5.77 a	7.63 a	11.03 a
	16	1.8 a	2.57 a	4.08 a	5.31 a	7.79 a	2.17 a	3.2 a	5.1 a	6.6 a	9.46 a	1.96 a	2.8 a	4.55 a	6.11 a	9.01 a	2.34 a	3.48 a	5.7 a	7.56 a	10.95 a
	24	1.65 a	2.42 a	3.94 a	5.17 a	7.63 a	2.01 a	3.03 a	4.94 a	6.45 a	9.3 a	1.82 a	2.65 a	4.42 a	5.97 a	8.86 a	2.19 a	3.32 a	5.54 a	7.41 a	10.8 a
9	12	1.74 a	2.48 a	3.86 a	4.99 a	7.28 a	2.1 a	3.07 a	4.79 a	6.17 a	8.81 a	1.91 a	2.72 a	4.37 a	5.85 a	8.56 a	2.28 a	3.37 a	5.43 a	7.19 a	10.36 a
	16	1.64 a	2.38 a	3.77 a	4.9 a	7.18 a	2 a	2.96 a	4.69 a	6.07 a	8.71 a	1.82 a	2.63 a	4.28 a	5.76 a	8.46 a	2.19 a	3.27 a	5.33 a	7.1 a	10.26 a
	24	1.46 a	2.19 a	3.6 a	4.72 a	6.98 a	1.8 a	2.76 a	4.49 a	5.88 a	8.51 a	1.65 a	2.45 a	4.11 a	5.59 a	8.27 a	2 a	3.08 a	5.14 a	6.91 a	10.06 a
10	12	1.58 a	2.29 a	3.53 a	4.55 a	6.62 a	1.93 a	2.84 a	4.37 a	5.61 a	8.02 a	1.77 a	2.56 a	4.07 a	5.47 a	7.95 a	2.13 a	3.16 a	5.04 a	6.7 a	9.61 a
	16	1.47 a	2.17 a	3.42 a	4.44 a	6.5 a	1.81 a	2.71 a	4.25 a	5.49 a	7.9 a	1.67 a	2.45 a	3.97 a	5.36 a	7.83 a	2.01 a	3.04 a	4.92 a	6.58 a	9.48 a
	24	1.26 a	1.95 a	3.22 a	4.23 a	6.27 a	1.57 a	2.47 a	4.01 a	5.27 a	7.66 a	1.46 a	2.23 a	3.77 a	5.14 a	7.6 a	1.79 a	2.81 a	4.69 a	6.35 a	9.24 a
12	12	1.25 a	1.87 a	2.79 a	3.6 a	5.23 a	1.56 a	2.32 a	3.45 a	4.44 a	6.36 a	1.46 a	2.17 a	3.41 a	4.54 a	6.58 a	1.79 a	2.69 a	4.19 a	5.57 a	7.97 a
	16	1.11 a	1.72 a	2.66 a	3.47 a	5.08 a	1.4 a	2.16 a	3.3 a	4.3 a	6.21 a	1.32 a	2.02 a	3.27 a	4.39 a	6.42 a	1.63 a	2.53 a	4.03 a	5.41 a	7.8 a
	24	0.86 c	1.44 b	2.42 a	3.22 a	4.8 a	1.11 c	1.86 a	3.03 a	4.03 a	5.92 a	1.06 b	1.74 a	3.01 a	4.12 a	6.11 a	1.35 a	2.22 a	3.74 a	5.11 a	7.48 a
14	12	0.93 b	1.44 a	2.14 a	2.78 a	4.03 a	1.18 a	1.81 a	2.64 a	3.43 a	4.94 a	1.14 a	1.75 a	2.71 a	3.57 a	5.17 a	1.43 a	2.19 a	3.32 a	4.39 a	6.3 a
	16	0.78 d	1.28 b	2 a	2.64 a	3.87 a	1.01 c	1.63 b	2.48 a	3.28 a	4.77 a	0.98 c	1.58 a	2.55 a	3.41 a	4.99 a	1.25 b	2 a	3.14 a	4.21 a	6.12 a
	24	0.52 e	0.99 d	1.75 c	2.38 b	3.58 a	0.7 d	1.31 d	2.19 c	2.99 a	4.46 a	0.7 d	1.26 c	2.27 b	3.11 a	4.66 a	0.92 d	1.65 b	2.82 a	3.88 a	5.76 a
16	12	0.65 d	1.06 c	1.63 b	2.14 a	3.12 a	0.84 c	1.36 b	2.01 a	2.66 a	3.85 a	0.84 c	1.35 b	2.12 a	2.78 a	4.04 a	1.07 b	1.71 a	2.6 a	3.42 a	4.95 a
	16	0.51 e	0.9 d	1.49 c	2 b	2.96 a	0.67 d	1.18 c	1.86 c	2.5 a	3.68 a	0.68 d	1.17 c	1.96 b	2.61 a	3.85 a	0.89 d	1.51 b	2.41 a	3.24 a	4.76 a
	24	0.25 f	0.61 e	1.25 e	1.74 d	2.67 c	0.38 e	0.86 e	1.58 d	2.21 c	3.37 b	0.39 e	0.85 e	1.67 d	2.31 c	3.52 b	0.56 e	1.16 d	2.09 c	2.91 b	4.4 a

5 psf Lateral Load (Interior Walls Only)																					
Wall	Spacing	600S162-(mils)					600S200-(mils)					800S162-(mils)					800S200-(mils)				
Height	(in.)	33 ksi		50 ksi			33 ksi		50 ksi			33 ksi		50 ksi			33 ksi		50 ksi		
(ft)	o.c.	33	43	54	68	97	33	43	54	68	97	33	43	54	68	97	33	43	54	68	97
8	12	2.42 a	3.39 a	5.61 a	7.45 a	11.4 a	2.86 a	4.31 a	7.46 a	9.97 a	15.65 a	2.39 a*	3.35 a	5.43 a	7.25 a	11.26 a	2.97 a*	4.47 a	7.74 a	10.29 a	15.98 a
	16	2.37 a	3.35 a	5.57 a	7.41 a	11.36 a	2.81 a	4.26 a	7.41 a	9.92 a	15.6 a	2.36 a*	3.32 a	5.4 a	7.22 a	11.24 a	2.93 a*	4.44 a	7.71 a	10.25 a	15.95 a
	24	2.28 a	3.27 a	5.49 a	7.33 a	11.29 a	2.72 a	4.16 a	7.31 a	9.83 a	15.51 a	2.29 a*	3.26 a	5.35 a	7.16 a	11.18 a	2.86 a*	4.36 a	7.64 a	10.19 a	15.89 a
9	12	2.38 a	3.36 a	5.57 a	7.41 a	11.36 a	2.8 a	4.23 a	7.31 a	9.79 a	15.39 a	2.37 a*	3.33 a	5.41 a	7.22 a	11.24 a	2.94 a*	4.44 a	7.71 a	10.26 a	15.95 a
	16	2.32 a	3.3 a	5.52 a	7.36 a	11.31 a	2.74 a	4.16 a	7.25 a	9.73 a	15.33 a	2.32 a*	3.29 a	5.37 a	7.19 a	11.21 a	2.89 a*	4.39 a	7.67 a	10.21 a	15.91 a
	24	2.2 a	3.19 a	5.42 a	7.26 a	11.22 a	2.62 a	4.03 a	7.12 a	9.61 a	15.2 a	2.24 a*	3.21 a	5.3 a	7.12 a	11.14 a	2.8 a*	4.3 a	7.57 a	10.13 a	15.83 a
10	12	2.33 a	3.31 a	5.53 a	7.37 a	11.32 a	2.73 a	4.13 a	7.14 a	9.58 a	15.07 a	2.33 a*	3.3 a	5.38 a	7.2 a	11.21 a	2.9 a*	4.41 a	7.68 a	10.22 a	15.92 a
	16	2.25 a	3.24 a	5.46 a	7.3 a	11.26 a	2.65 a	4.05 a	7.05 a	9.5 a	14.99 a	2.28 a*	3.25 a	5.34 a	7.15 a	11.17 a	2.85 a*	4.35 a	7.62 a	10.17 a	15.87 a
	24	2.1 a	3.11 a	5.33 a	7.17 a	11.13 a	2.5 a	3.88 a	6.89 a	9.34 a	14.83 a	2.18 a*	3.15 a	5.24 a	7.06 a	11.08 a	2.73 a*	4.23 a	7.5 a	10.06 a	15.77 a
12	12	2.17 a	3.15 a	5.35 a	7.25 a	11.2 a	2.55 a	3.88 a	6.67 a	9 a	14.21 a	2.26 a*	3.22 a	5.31 a	7.13 a	11.15 a	2.82 a*	4.32 a	7.59 a	10.14 a	15.84 a
	16	2.06 a	3.05 a	5.25 a	7.15 a	11.1 a	2.44 a	3.76 a	6.55 a	8.89 a	14.09 a	2.18 a*	3.15 a	5.24 a	7.06 a	11.08 a	2.74 a*	4.23 a	7.5 a	10.06 a	15.76 a
	24	1.85 a	2.85 a	5.05 a	6.95 a	10.89 a	2.22 a	3.52 a	6.31 a	8.66 a	13.85 a	2.03 a*	3 a	5.11 a	6.93 a	10.95 a	2.57 a*	4.06 a	7.32 a	9.9 a	15.61 a
14	12	1.95 a	2.91 a	4.93 a	6.77 a	10.96 a	2.32 a	3.56 a	6.07 a	8.26 a	13.08 a	2.17 a*	3.13 a	5.22 a	7.04 a	11.06 a	2.69 a*	4.16 a	7.36 a	9.96 a	15.73 a
	16	1.81 a	2.78 a	4.8 a	6.63 a	10.8 a	2.17 a	3.4 a	5.91 a	8.1 a	12.91 a	2.06 a*	3.03 a	5.13 a	6.95 a	10.96 a	2.58 a*	4.04 a	7.24 a	9.84 a	15.61 a
	24	1.54 a	2.51 a	4.53 a	6.35 a	10.49 a	1.89 a	3.09 a	5.59 a	7.79 a	12.58 a	1.85 a*	2.83 a	4.94 a	6.76 a	10.77 a	2.35 a*	3.8 a	6.99 a	9.61 a	15.38 a
16	12	1.71 a	2.62 a	4.41 a	6.1 a	9.89 a	2.05 a	3.18 a	5.38 a	7.38 a	11.74 a	2.05 a*	3.02 a	5.11 a	6.93 a	10.94 a	2.52 a*	3.93 a	6.95 a	9.46 a	15.15 a
	16	1.53 a	2.45 a	4.24 a	5.91 a	9.68 a	1.87 a	2.98 a	5.18 a	7.17 a	11.52 a	1.92 a*	2.89 a	4.98 a	6.8 a	10.81 a	2.37 a*	3.77 a	6.78 a	9.3 a	15 a
	24	1.2 b	2.12 a	3.91 a	5.57 a	9.28 a	1.52 a	2.61 a	4.79 a	6.79 a	11.09 a	1.64 a*	2.62 a	4.72 a	6.54 a	10.54 a	2.09 a*	3.46 a	6.46 a	9 a	14.68 a

SECTION PROPERTIES TABLE NOTES

1. Allowable axial loads listed in kips (1 kip = 1000 pounds).
2. Allowable axial loads determined in accordance with AISI S240-15, assuming that all axial loads pass through the geometric center of the section
3. Listed lateral pressures and axial loads have not been modified for 1/3 stress increase based on wind/earthquake or multiple transient loads.
4. Allowable axial loads based on lateral and torsional bracing at a maximum spacing of 4 feet on center.
5. The 5 psf live load has not been reduced for deflection checks. For 15 psf or higher wind pressure, read the note below.

IBC 2018/ASCE 7-10: Due to the change in the model building codes, design wind pressures determined using IBC 2012/ASCE 7-10 are strength level loads (LRFD) in comparison to those determined in earlier IBC codes which were service level loads (ASD). The load/span tables that follow are based on service level (ASD) wind loads. Therefore, to properly use the load/span tables in this catalog, multiply the IBC 2012/ASCE 7-10 design wind pressures by 0.6 (Reference section 2.4 ASCE 7-10) prior to entering the load/span tables.

Example:

- * ASCE 7-10 Calculated Design Wind Pressure = 25 psf (Strength level loads, LRFD)
- * Convert to service level loads (ASD) = 25 psf x 0.6 = 15 psf
- * Use 10 pfs as the Pressure Value used in this Table to determine the member span

Any Other Building Code: The load/span tables that follow are based on service level (ASD) wind loads. If the wind load being used meets this criterion, it does not need to be modified prior to using the tables.

6. Studs are assumed to be adequately braced at a maximum spacing of Lu to develop full allowable moment, Ma.
7. End supports have not been checked for web crippling. Refer web crippling capacity tables.
8. All tables are based on simple (single) span.
9. Cells marked with an " * " have h/t>200, thus require bearing stiffeners. Cells are left blank when h/t>260.
10. Cells marked with an a, b, c, d, e or f meets L/720, L/600, L/480, L/360, L/240, or L/120 respectively. Blank cells do not meet L/120.
11. Stud distortional buckling moment based on assumed $K\varphi = 0$
12. Moment of inertia for deflection is optimized based on the maximum moment at service loads for the listed spans; therefore span values may be greater than spans based on effective moment of inertia listed in section property tables

COMBINED AXIAL AND LATERAL LOAD TABLES

15 psf Lateral Load

Wall	Spacing	362S162-(mils)					362S200-(mils)					400S162-(mils)					400S200-(mils)				
Height	(in.)	33 ksi		50 ksi			33 ksi		50 ksi			33 ksi		50 ksi			33 ksi		50 ksi		
(ft)	o.c.	33	43	54	68	97	33	43	54	68	97	33	43	54	68	97	33	43	54	68	97
8	12	1.44 a	2.2 a	3.74 a	4.96 a	7.41 a	1.77 a	2.79 a	4.71 a	6.22 a	9.07 a	1.62 a	2.45 a	4.22 a	5.77 a	8.64 a	1.97 a	3.1 a	5.32 a	7.19 a	10.57 a
	16	1.23 a	1.99 a	3.55 a	4.76 a	7.19 a	1.55 a	2.56 a	4.49 a	6 a	8.84 a	1.42 a	2.25 a	4.03 a	5.57 a	8.42 a	1.76 a	2.88 a	5.1 a	6.97 a	10.34 a
	24	0.85 a	1.59 a	3.17 a	4.38 a	6.76 a	1.13 a	2.13 a	4.06 a	5.58 a	8.4 a	1.05 a	1.86 a	3.67 a	5.18 a	7.99 a	1.35 a	2.46 a	4.68 a	6.55 a	9.9 a
9	12	1.21 a	1.93 a	3.35 a	4.47 a	6.7 a	1.51 a	2.47 a	4.21 a	5.6 a	8.22 a	1.4 a	2.2 a	3.87 a	5.33 a	7.99 a	1.73 a	2.8 a	4.86 a	6.63 a	9.77 a
	16	0.97 a	1.67 a	3.12 a	4.23 a	6.43 a	1.25 a	2.19 a	3.94 a	5.34 a	7.94 a	1.17 a	1.95 a	3.64 a	5.08 a	7.71 a	1.47 a	2.53 a	4.59 a	6.36 a	9.49 a
	24	0.53 c	1.21 a	2.68 a	3.77 a	5.92 a	0.76 b	1.68 a	3.44 a	4.84 a	7.41 a	0.73 b	1.49 a	3.2 a	4.6 a	7.19 a	0.99 a	2.03 a	4.09 a	5.84 a	8.94 a
10	12	0.97 a	1.64 a	2.93 a	3.94 a	5.95 a	1.25 a	2.13 a	3.69 a	4.95 a	7.32 a	1.17 a	1.93 a	3.48 a	4.83 a	7.26 a	1.47 a	2.48 a	4.36 a	6.01 a	8.89 a
	16	0.7 b	1.36 a	2.67 a	3.66 a	5.64 a	0.95 a	1.82 a	3.38 a	4.64 a	7 a	0.9 a	1.64 a	3.21 a	4.54 a	6.93 a	1.18 a	2.17 a	4.05 a	5.69 a	8.55 a
	24	0.23 d	0.84 c	2.18 b	3.15 a	5.06 a	0.42 c	1.25 b	2.83 a	4.09 a	6.4 a	0.41 c	1.12 b	2.7 a	3.99 a	6.33 a	0.64 b	1.59 a	3.47 a	5.1 a	7.92 a
12	12	0.53 d	1.08 b	2.1 a	2.88 a	4.43 a	0.74 c	1.46 a	2.66 a	3.66 a	5.52 a	0.72 b	1.37 a	2.65 a	3.73 a	5.69 a	0.96 b	1.81 a	3.33 a	4.69 a	7.04 a
	16	0.24 e	0.76 d	1.8 c	2.58 b	4.08 a	0.41 d	1.11 c	2.32 b	3.32 a	5.16 a	0.41 d	1.03 c	2.33 b	3.38 a	5.3 a	0.61 c	1.44 b	2.96 a	4.31 a	6.63 a
	24		0.2 e	1.29 d	2.03 d	3.46 b		0.49 d	1.73 d	2.72 c	4.49 a		0.43 d	1.75 d	2.76 c	4.6 a		0.78 d	2.31 c	3.62 b	5.88 a
14	12	0.18 e	0.61 d	1.42 d	2.03 c	3.19 a	0.32 e	0.9 d	1.82 c	2.61 b	4.05 a	0.33 d	0.86 c	1.89 c	2.7 a	4.21 a	0.5 d	1.21 c	2.39 b	3.44 a	5.29 a
	16		0.29 e	1.13 e	1.73 d	2.85 c		0.54 e	1.49 d	2.28 c	3.68 b	0.01 e	0.5 d	1.56 d	2.35 c	3.81 a	0.14 e	0.81 d	2.02 c	3.05 b	4.86 a
	24			0.64 f	1.2 e	2.24 d			0.92 e	1.69 e	3.03 d			0.98 e	1.73 d	3.11 c		0.13 e	1.36 e	2.36 d	4.11 c
16	12		0.26 e	0.93 e	1.41 d	2.29 c	0.01 f	0.46 e	1.22 d	1.85 d	2.97 b	0.03 e	0.44 e	1.3 d	1.92 c	3.08 b	0.14 e	0.71 d	1.67 d	2.48 c	3.93 a
	16			0.66 f	1.12 e	1.96 d		0.12 f	0.91 e	1.53 e	2.61 d		0.09 e	0.97 e	1.58 d	2.7 c		0.32 e	1.3 e	2.1 d	3.52 c
	24			0.19 f	0.62 f	1.39 e			0.38 f	0.98 f	1.99 e			0.42 f	0.98 e	2.03 e			0.68 f	1.45 e	2.79 d

15 psf Lateral Load

Wall	Spacing	600S162-(mils)					600S200-(mils)					800S162-(mils)					800S200-(mils)				
Height	(in.)	33 ksi		50 ksi			33 ksi		50 ksi			33 ksi		50 ksi			33 ksi		50 ksi		
(ft)	o.c.	33	43	54	68	97	33	43	54	68	97	33	43	54	68	97	33	43	54	68	97
8	12	2.14 a	3.14 a	5.37 a	7.22 a	11.18 a	2.57 a	4.01 a	7.16 a	9.69 a	15.37 a	2.2 a*	3.17 a	5.26 a	7.08 a	11.1 a	2.75 a*	4.25 a	7.53 a	10.09 a	15.8 a
	16	2 a	3.02 a	5.25 a	7.1 a	11.06 a	2.43 a	3.86 a	7.01 a	9.55 a	15.23 a	2.1 a*	3.07 a	5.18 a	7 a	11.02 a	2.65 a*	4.14 a	7.42 a	9.99 a	15.7 a
	24	1.73 a	2.77 a	5.02 a	6.88 a	10.84 a	2.15 a	3.56 a	6.71 a	9.27 a	14.95 a	1.9 a*	2.89 a	5.01 a	6.84 a	10.86 a	2.44 a*	3.93 a	7.21 a	9.8 a	15.52 a
9	12	2.02 a	3.03 a	5.26 a	7.11 a	11.07 a	2.43 a	3.84 a	6.92 a	9.43 a	15.02 a	2.12 a*	3.09 a	5.19 a	7.01 a	11.03 a	2.67 a*	4.16 a	7.44 a	10 a	15.71 a
	16	1.85 a	2.87 a	5.11 a	6.96 a	10.92 a	2.26 a	3.65 a	6.73 a	9.25 a	14.84 a	1.99 a*	2.97 a	5.08 a	6.91 a	10.93 a	2.53 a*	4.02 a	7.3 a	9.88 a	15.59 a
	24	1.51 a	2.56 a	4.81 a	6.67 a	10.63 a	1.9 a	3.27 a	6.35 a	8.89 a	14.48 a	1.75 a*	2.73 a	4.87 a	6.69 a	10.72 a	2.27 a*	3.74 a	7.02 a	9.63 a	15.35 a
10	12	1.89 a	2.91 a	5.14 a	6.98 a	10.94 a	2.28 a	3.65 a	6.65 a	9.12 a	14.6 a	2.02 a*	3 a	5.11 a	6.93 a	10.95 a	2.57 a*	4.05 a	7.33 a	9.91 a	15.62 a
	16	1.67 a	2.71 a	4.94 a	6.8 a	10.75 a	2.06 a	3.41 a	6.41 a	8.89 a	14.37 a	1.87 a*	2.85 a	4.97 a	6.8 a	10.82 a	2.4 a*	3.88 a	7.15 a	9.75 a	15.46 a
	24	1.26 a	2.32 a	4.57 a	6.43 a	10.38 a	1.63 a	2.96 a	5.94 a	8.45 a	13.92 a	1.57 a*	2.56 a	4.7 a	6.53 a	10.56 a	2.07 a*	3.54 a	6.81 a	9.43 a	15.16 a
12	12	1.54 a	2.56 a	4.76 a	6.66 a	10.6 a	1.91 a	3.19 a	5.96 a	8.33 a	13.5 a	1.81 a*	2.79 a	4.91 a	6.73 a	10.75 a	2.33 a*	3.8 a	7.06 a	9.66 a	15.37 a
	16	1.25 a	2.28 a	4.48 a	6.37 a	10.3 a	1.6 a	2.86 a	5.63 a	8 a	13.16 a	1.59 a*	2.57 a	4.71 a	6.53 a	10.55 a	2.09 a*	3.55 a	6.81 a	9.42 a	15.14 a
	24	0.7 a	1.75 a	3.94 a	5.82 a	9.74 a	1.03 a	2.24 a	4.98 a	7.37 a	12.5 a	1.16 a*	2.15 a	4.31 a	6.15 a	10.17 a	1.63 a*	3.05 a	6.3 a	8.95 a	14.68 a
14	12	1.15 a	2.13 a	4.15 a	5.95 a	10.05 a	1.49 a	2.65 a	5.14 a	7.34 a	12.1 a	1.55 a*	2.53 a	4.65 a	6.48 a	10.49 a	2.03 a*	3.45 a	6.63 a	9.28 a	15.04 a
	16	0.79 a	1.78 a	3.79 a	5.58 a	9.63 a	1.11 a	2.24 a	4.71 a	6.92 a	11.64 a	1.25 a*	2.24 a	4.38 a	6.2 a	10.21 a	1.71 a*	3.11 a	6.28 a	8.94 a	14.71 a
	24	0.14 c	1.12 b	3.11 a	4.87 a	8.83 a	0.42 c	1.48 a	3.92 a	6.13 a	10.78 a	0.69 a*	1.68 a	3.84 a	5.67 a	9.66 a	1.1 a*	2.46 a	5.59 a	8.29 a	14.05 a
16	12	0.75 b	1.67 a	3.45 a	5.08 a	8.73 a	1.05 a	2.09 a	4.26 a	6.25 a	10.5 a	1.25 a*	2.23 a	4.35 a	6.16 a	10.15 a	1.68 a*	3.02 a	6 a	8.55 a	14.23 a
	16	0.35 c	1.26 b	3.03 a	4.64 a	8.22 a	0.62 c	1.62 a	3.76 a	5.75 a	9.94 a	0.88 a*	1.86 a	3.98 a	5.8 a	9.77 a	1.28 a*	2.59 a	5.55 a	8.13 a	13.78 a
	24		0.51 d	2.28 c	3.82 b	7.28 a		0.77 c	2.88 b	4.85 a	8.92 a	0.19 b*	1.15 a	3.29 a	5.09 a	9.04 a	0.54 a*	1.79 a	4.71 a	7.3 a	12.92 a

SECTION PROPERTIES TABLE NOTES

1. Allowable axial loads listed in kips (1 kip = 1000 pounds).
2. Allowable axial loads determined in accordance with AISI S240-15, assuming that all axial loads pass through the geometric center of the section
3. Listed lateral pressures and axial loads have not been modified for 1/3 stress increase based on wind/earthquake or multiple transient loads.
4. Allowable axial loads based on lateral and torsional bracing at a maximum spacing of 4 feet on center.
5. The 5 psf live load has not been reduced for deflection checks. For 15 psf or higher wind pressure, read the note below.

IBC 2018/ASCE 7-10: Due to the change in the model building codes, design wind pressures determined using IBC 2012/ASCE 7-10 are strength level loads (LRFD) in comparison to those determined in earlier IBC codes which were service level loads (ASD). The load/span tables that follow are based on service level (ASD) wind loads. Therefore, to properly use the load/span tables in this catalog, multiply the IBC 2012/ASCE 7-10 design wind pressures by 0.6 (Reference section 2.4 ASCE 7-10) prior to entering the load/span tables.

Example:

- * ASCE 7-10 Calculated Design Wind Pressure = 25 psf (Strength level loads, LRFD)
- * Convert to service level loads (ASD) = 25 psf x 0.6 = 15 psf
- * Use 10 pfs as the Pressure Value used in this Table to determine the member span

Any Other Building Code: The load/span tables that follow are based on service level (ASD) wind loads. If the wind load being used meets this criterion, it does not need to be modified prior to using the tables.

6. Studs are assumed to be adequately braced at a maximum spacing of Lu to develop full allowable moment, Ma.
7. End supports have not been checked for web crippling. Refer web crippling capacity tables.
8. All tables are based on simple (single) span.
9. Cells marked with an " * " have h/t>200, thus require bearing stiffeners. Cells are left blank when h/t>260.
10. Cells marked with an a, b, c, d, e or f meets L/720, L/600, L/480, L/360, L/240, or L/120 respectively. Blank cells do not meet L/120.
11. Stud distortional buckling moment based on assumed Kφ = 0
12. Moment of inertia for deflection is optimized based on the maximum moment at service loads for the listed spans; therefore span values may be greater than spans based on effective moment of inertia listed in section property tables

COMBINED AXIAL AND LATERAL LOAD TABLES

20 psf Lateral Load

Wall	Spacing	362S162-(mils)					362S200-(mils)					400S162-(mils)					400S200-(mils)				
Height	(in.)	33 ksi		50 ksi			33 ksi		50 ksi			33 ksi		50 ksi			33 ksi		50 ksi		
(ft)	o.c.	33	43	54	68	97	33	43	54	68	97	33	43	54	68	97	33	43	54	68	97
8	12	1.23 a	1.99 a	3.55 a	4.76 a	7.19 a	1.55 a	2.56 a	4.49 a	6 a	8.84 a	1.42 a	2.25 a	4.03 a	5.57 a	8.42 a	1.76 a	2.88 a	5.1 a	6.97 a	10.34 a
	16	0.98 a	1.72 a	3.3 a	4.5 a	6.9 a	1.27 a	2.27 a	4.2 a	5.72 a	8.54 a	1.17 a	1.99 a	3.79 a	5.31 a	8.13 a	1.48 a	2.6 a	4.82 a	6.69 a	10.05 a
	24	0.5 b	1.21 a	2.82 a	4.01 a	6.35 a	0.74 b	1.71 a	3.65 a	5.18 a	7.97 a	0.7 a	1.5 a	3.32 a	4.81 a	7.58 a	0.97 a	2.06 a	4.28 a	6.14 a	9.48 a
9	12	0.97 a	1.67 a	3.12 a	4.23 a	6.43 a	1.25 a	2.19 a	3.94 a	5.34 a	7.94 a	1.17 a	1.95 a	3.64 a	5.08 a	7.71 a	1.47 a	2.53 a	4.59 a	6.36 a	9.49 a
	16	0.67 b	1.36 a	2.82 a	3.92 a	6.09 a	0.92 a	1.85 a	3.6 a	5 a	7.58 a	0.87 a	1.64 a	3.34 a	4.76 a	7.36 a	1.15 a	2.19 a	4.25 a	6.01 a	9.12 a
	24	0.13 d	0.78 c	2.27 b	3.34 a	5.44 a	0.32 c	1.21 b	2.97 a	4.37 a	6.91 a	0.33 c	1.07 b	2.78 a	4.16 a	6.7 a	0.55 b	1.56 a	3.61 a	5.36 a	8.43 a
10	12	0.7 b	1.36 a	2.67 a	3.66 a	5.64 a	0.95 a	1.82 a	3.38 a	4.64 a	7 a	0.9 a	1.64 a	3.21 a	4.54 a	6.93 a	1.18 a	2.17 a	4.05 a	5.69 a	8.55 a
	16	0.38 d	1.01 c	2.34 a	3.32 a	5.25 a	0.59 c	1.43 b	3 a	4.27 a	6.59 a	0.57 c	1.29 a	2.87 a	4.17 a	6.52 a	0.81 b	1.78 a	3.66 a	5.29 a	8.13 a
	24		0.38 d	1.74 c	2.69 b	4.53 a		0.74 d	2.32 c	3.58 b	5.84 a		0.64 c	2.24 b	3.48 a	5.76 a	0.15 d	1.07 c	2.94 a	4.54 a	7.33 a
12	12	0.24 e	0.76 d	1.8 c	2.58 b	4.08 a	0.41 d	1.11 c	2.32 b	3.32 a	5.16 a	0.41 d	1.03 c	2.33 b	3.38 a	5.3 a	0.61 c	1.44 b	2.96 a	4.31 a	6.63 a
	16		0.38 e	1.45 d	2.2 c	3.66 b	0.01 e	0.69 d	1.92 c	2.91 b	4.71 a	0.04 e	0.62 d	1.94 c	2.96 b	4.82 a	0.2 d	0.99 c	2.52 b	3.84 a	6.12 a
	24			0.84 e	1.55 e	2.9 d			1.21 e	2.19 d	3.9 c			1.25 e	2.2 d	3.96 c		0.2 e	1.73 d	3.01 c	5.21 b
14	12		0.29 e	1.13 e	1.73 d	2.85 c		0.54 e	1.49 d	2.28 c	3.68 b	0.01 e	0.5 d	1.56 d	2.35 c	3.81 a	0.14 e	0.81 d	2.02 c	3.05 b	4.86 a
	16			0.79 e	1.36 e	2.43 d		0.12 e	1.1 e	1.88 d	3.23 c		0.08 e	1.16 e	1.92 d	3.33 c		0.35 e	1.57 d	2.58 c	4.35 b
	24			0.2 f	0.73 f	1.71 e			0.43 f	1.18 e	2.45 e			0.48 f	1.18 e	2.49 d			0.79 e	1.76 e	3.44 d
16	12			0.66 f	1.12 e	1.96 d		0.12 f	0.91 e	1.53 e	2.61 d		0.09 e	0.97 e	1.58 d	2.7 c		0.32 e	1.3 e	2.1 d	3.52 c
	16			0.34 f	0.77 f	1.57 e			0.54 f	1.15 e	2.19 e			0.59 f	1.17 e	2.24 d			0.87 e	1.66 e	3.02 d
	24				0.19 f	0.9 f				0.5 f	1.46 f				0.48 f	1.45 e			0.14 f	0.89 f	2.17 e

20 psf Lateral Load

Wall	Spacing	600S162-(mils)					600S200-(mils)					800S162-(mils)					800S200-(mils)				
Height	(in.)	33 ksi		50 ksi			33 ksi		50 ksi			33 ksi		50 ksi			33 ksi		50 ksi		
(ft)	o.c.	33	43	54	68	97	33	43	54	68	97	33	43	54	68	97	33	43	54	68	97
8	12	2 a	3.02 a	5.25 a	7.1 a	11.06 a	2.43 a	3.86 a	7.01 a	9.55 a	15.23 a	2.1 a*	3.07 a	5.18 a	7 a	11.02 a	2.65 a*	4.14 a	7.42 a	9.99 a	15.7 a
	16	1.82 a	2.85 a	5.1 a	6.95 a	10.92 a	2.25 a	3.66 a	6.81 a	9.36 a	15.04 a	1.97 a*	2.95 a	5.07 a	6.89 a	10.91 a	2.51 a*	4 a	7.28 a	9.86 a	15.58 a
	24	1.47 a	2.53 a	4.79 a	6.65 a	10.62 a	1.88 a	3.27 a	6.42 a	9 a	14.67 a	1.71 a*	2.7 a	4.84 a	6.67 a	10.7 a	2.23 a*	3.71 a	6.99 a	9.6 a	15.33 a
9	12	1.85 a	2.87 a	5.11 a	6.96 a	10.92 a	2.26 a	3.65 a	6.73 a	9.25 a	14.84 a	1.99 a*	2.97 a	5.08 a	6.91 a	10.93 a	2.53 a*	4.02 a	7.3 a	9.88 a	15.59 a
	16	1.62 a	2.66 a	4.91 a	6.77 a	10.73 a	2.02 a	3.4 a	6.48 a	9.01 a	14.6 a	1.83 a*	2.81 a	4.94 a	6.77 a	10.79 a	2.36 a*	3.84 a	7.11 a	9.71 a	15.43 a
	24	1.18 a	2.25 a	4.52 a	6.38 a	10.35 a	1.56 a	2.91 a	5.98 a	8.54 a	14.12 a	1.5 a*	2.5 a	4.65 a	6.49 a	10.51 a	2.01 a*	3.47 a	6.75 a	9.38 a	15.11 a
10	12	1.67 a	2.71 a	4.94 a	6.8 a	10.75 a	2.06 a	3.41 a	6.41 a	8.89 a	14.37 a	1.87 a*	2.85 a	4.97 a	6.8 a	10.82 a	2.4 a*	3.88 a	7.15 a	9.75 a	15.46 a
	16	1.4 a	2.45 a	4.69 a	6.55 a	10.5 a	1.77 a	3.11 a	6.1 a	8.59 a	14.07 a	1.67 a*	2.65 a	4.79 a	6.62 a	10.65 a	2.18 a*	3.65 a	6.93 a	9.54 a	15.26 a
	24	0.86 a	1.94 a	4.2 a	6.06 a	10.02 a	1.22 a	2.51 a	5.49 a	8.02 a	13.47 a	1.27 a*	2.27 a	4.44 a	6.27 a	10.3 a	1.75 a*	3.2 a	6.47 a	9.12 a	14.86 a
12	12	1.25 a	2.28 a	4.48 a	6.37 a	10.3 a	1.6 a	2.86 a	5.63 a	8 a	13.16 a	1.59 a*	2.57 a	4.71 a	6.53 a	10.55 a	2.09 a*	3.55 a	6.81 a	9.42 a	15.14 a
	16	0.88 a	1.92 a	4.11 a	6 a	9.92 a	1.22 a	2.44 a	5.19 a	7.58 a	12.72 a	1.3 a*	2.29 a	4.44 a	6.27 a	10.29 a	1.78 a*	3.22 a	6.47 a	9.11 a	14.83 a
	24	0.19 c	1.24 a	3.43 a	5.3 a	9.19 a	0.5 b	1.66 a	4.37 a	6.77 a	11.86 a	0.74 a*	1.74 a	3.93 a	5.76 a	9.78 a	1.17 a*	2.57 a	5.81 a	8.49 a	14.23 a
14	12	0.79 a	1.78 a	3.79 a	5.58 a	9.63 a	1.11 a	2.24 a	4.71 a	6.92 a	11.64 a	1.25 a*	2.24 a	4.38 a	6.2 a	10.21 a	1.71 a*	3.11 a	6.28 a	8.94 a	14.71 a
	16	0.35 c	1.33 b	3.33 a	5.1 a	9.09 a	0.64 b	1.73 a	4.18 a	6.38 a	11.06 a	0.87 a*	1.86 a	4.02 a	5.84 a	9.84 a	1.3 a*	2.67 a	5.82 a	8.51 a	14.27 a
	24		0.52 d	2.5 c	4.21 a	8.09 a		0.79 c	3.19 b	5.39 a	9.97 a	0.15 b*	1.14 a	3.32 a	5.14 a	9.13 a	0.52 a*	1.83 a	4.94 a	7.66 a	13.41 a
16	12	0.35 c	1.26 b	3.03 a	4.64 a	8.22 a	0.62 c	1.62 a	3.76 a	5.75 a	9.94 a	0.88 a*	1.86 a	3.98 a	5.8 a	9.77 a	1.28 a*	2.59 a	5.55 a	8.13 a	13.78 a
	16		0.75 d	2.52 c	4.08 a	7.58 a	0.1 d	1.04 c	3.16 b	5.14 a	9.25 a	0.41 b*	1.38 a	3.52 a	5.32 a	9.28 a	0.78 a*	2.05 a	4.98 a	7.57 a	13.2 a
	24			1.6 d	3.09 c	6.44 b		0.01 d	2.09 d	4.03 c	8.01 a		0.49 b	2.63 a	4.42 a	8.34 a		1.03 a	3.91 a	6.52 a	12.09 a

SECTION PROPERTIES TABLE NOTES

1. Allowable axial loads listed in kips (1 kip = 1000 pounds).
2. Allowable axial loads determined in accordance with AISI S240-15, assuming that all axial loads pass through the geometric center of the section
3. Listed lateral pressures and axial loads have not been modified for 1/3 stress increase based on wind/earthquake or multiple transient loads.
4. Allowable axial loads based on lateral and torsional bracing at a maximum spacing of 4 feet on center.
5. The 5 psf live load has not been reduced for deflection checks. For 15 psf or higher wind pressure, read the note below.

IBC 2018/ASCE 7-10: Due to the change in the model building codes, design wind pressures determined using IBC 2012/ASCE 7-10 are strength level loads (LRFD) in comparison to those determined in earlier IBC codes which were service level loads (ASD). The load/span tables that follow are based on service level (ASD) wind loads. Therefore, to properly use the load/span tables in this catalog, multiply the IBC 2012/ASCE 7-10 design wind pressures by 0.6 (Reference section 2.4 ASCE 7-10) prior to entering the load/span tables.

Example:

- * ASCE 7-10 Calculated Design Wind Pressure = 25 psf (Strength level loads, LRFD)
- * Convert to service level loads (ASD) = 25 psf x 0.6 = 15 psf
- * Use 10 pfs as the Pressure Value used in this Table to determine the member span

Any Other Building Code: The load/span tables that follow are based on service level (ASD) wind loads. If the wind load being used meets this criterion, it does not need to be modified prior to using the tables.

6. Studs are assumed to be adequately braced at a maximum spacing of Lu to develop full allowable moment, Ma.
7. End supports have not been checked for web crippling. Refer web crippling capacity tables.
8. All tables are based on simple (single) span.
9. Cells marked with an " * " have h/t>200, thus require bearing stiffeners. Cells are left blank when h/t>260.
10. Cells marked with an a, b, c, d, e or f meets L/720, L/600, L/480, L/360, L/240, or L/120 respectively. Blank cells do not meet L/120.
11. Stud distortional buckling moment based on assumed $K\varphi = 0$
12. Moment of inertia for deflection is optimized based on the maximum moment at service loads for the listed spans; therefore span values may be greater than spans based on effective moment of inertia listed in section property tables

COMBINED AXIAL AND LATERAL LOAD TABLES

25 psf Lateral Load

Wall	Spacing	362S162-(mils)					362S200-(mils)					400S162-(mils)					400S200-(mils)				
Height	(in.)	33 ksi		50 ksi			33 ksi		50 ksi			33 ksi		50 ksi			33 ksi		50 ksi		
(ft)	o.c.	33	43	54	68	97	33	43	54	68	97	33	43	54	68	97	33	43	54	68	97
8	12	1.04 a	1.78 a	3.36 a	4.57 a	6.97 a	1.34 a	2.34 a	4.27 a	5.79 a	8.62 a	1.23 a	2.05 a	3.85 a	5.37 a	8.2 a	1.55 a	2.67 a	4.89 a	6.76 a	10.12 a
	16	0.73 a	1.46 a	3.05 a	4.25 a	6.62 a	1 a	1.99 a	3.92 a	5.45 a	8.26 a	0.93 a	1.74 a	3.55 a	5.06 a	7.86 a	1.22 a	2.32 a	4.55 a	6.41 a	9.76 a
	24	0.16 c	0.86 b	2.48 a	3.66 a	5.96 a	0.37 c	1.33 a	3.26 a	4.79 a	7.56 a	0.37 b	1.15 a	2.98 a	4.45 a	7.19 a	0.6 b	1.67 a	3.89 a	5.75 a	9.06 a
9	12	0.74 b	1.44 a	2.89 a	3.99 a	6.17 a	1 a	1.93 a	3.68 a	5.08 a	7.67 a	0.94 a	1.72 a	3.41 a	4.84 a	7.45 a	1.23 a	2.28 a	4.34 a	6.1 a	9.21 a
	16	0.39 c	1.06 b	2.54 a	3.62 a	5.76 a	0.61 c	1.52 a	3.28 a	4.68 a	7.24 a	0.59 b	1.35 a	3.06 a	4.45 a	7.02 a	0.84 a	1.87 a	3.92 a	5.68 a	8.77 a
	24		0.39 d	1.89 c	2.94 b	4.99 a		0.78 c	2.54 b	3.93 a	6.43 a		0.66 c	2.39 b	3.73 a	6.22 a	0.14 c	1.12 b	3.16 a	4.89 a	7.93 a
10	12	0.46 c	1.09 b	2.42 a	3.4 a	5.34 a	0.68 c	1.52 a	3.1 a	4.36 a	6.69 a	0.65 b	1.38 a	2.95 a	4.26 a	6.62 a	0.9 a	1.87 a	3.75 a	5.39 a	8.23 a
	16	0.08 d	0.68 d	2.03 c	2.99 a	4.88 a	0.25 d	1.07 c	2.65 b	3.91 a	6.21 a	0.26 d	0.96 b	2.54 a	3.82 a	6.13 a	0.47 c	1.41 b	3.29 a	4.91 a	7.72 a
	24			1.34 d	2.26 c	4.04 b		0.27 d	1.86 d	3.1 c	5.32 a		0.2 d	1.81 c	3.01 b	5.23 a		0.59 d	2.45 c	4.03 b	6.77 a
12	12		0.47 d	1.54 d	2.29 c	3.76 a	0.11 e	0.79 d	2.01 c	3.01 b	4.82 a	0.13 d	0.72 d	2.03 c	3.06 b	4.94 a	0.3 d	1.1 c	2.62 b	3.95 a	6.24 a
	16		0.03 e	1.13 e	1.86 d	3.27 c		0.3 e	1.55 d	2.53 c	4.29 b		0.25 e	1.58 d	2.56 c	4.38 b		0.58 d	2.11 c	3.41 b	5.65 a
	24			0.43 f	1.11 e	2.4 d			0.74 e	1.7 e	3.36 d			0.78 e	1.69 e	3.39 d			1.2 e	2.45 d	4.59 c
14	12			0.87 e	1.45 e	2.53 d		0.22 e	1.2 e	1.97 d	3.34 c		0.18 e	1.26 e	2.02 d	3.45 c		0.46 e	1.67 d	2.69 c	4.47 b
	16			0.49 f	1.04 e	2.06 e			0.75 e	1.51 e	2.83 d			0.81 e	1.54 e	2.9 d			1.16 e	2.15 d	3.88 c
	24				0.32 f	1.24 f				0.72 f	1.94 e			0.03 f	0.7 f	1.94 e			0.28 f	1.23 e	2.84 e
16	12			0.41 f	0.85 f	1.67 e			0.63 f	1.24 e	2.29 d			0.69 e	1.27 e	2.35 d			0.97 e	1.76 e	3.14 d
	16			0.05 f	0.47 f	1.22 f			0.22 f	0.81 f	1.81 e			0.26 f	0.81 f	1.83 e			0.49 f	1.26 e	2.57 e
	24					0.47 f				0.08 f	0.98 f				0.02 f	0.94 f				0.39 f	1.6 f

25 psf Lateral Load

Wall	Spacing	600S162-(mils)					600S200-(mils)					800S162-(mils)					800S200-(mils)				
Height	(in.)	33 ksi		50 ksi			33 ksi		50 ksi			33 ksi		50 ksi			33 ksi		50 ksi		
(ft)	o.c.	33	43	54	68	97	33	43	54	68	97	33	43	54	68	97	33	43	54	68	97
8	12	1.87 a	2.89 a	5.14 a	6.99 a	10.95 a	2.29 a	3.71 a	6.86 a	9.41 a	15.09 a	2 a*	2.98 a	5.09 a	6.92 a	10.94 a	2.55 a*	4.03 a	7.31 a	9.89 a	15.61 a
	16	1.64 a	2.69 a	4.94 a	6.8 a	10.77 a	2.06 a	3.46 a	6.61 a	9.18 a	14.86 a	1.84 a*	2.82 a	4.95 a	6.78 a	10.81 a	2.37 a*	3.85 a	7.14 a	9.73 a	15.45 a
	24	1.21 a	2.28 a	4.56 a	6.43 a	10.4 a	1.6 a	2.98 a	6.12 a	8.72 a	14.4 a	1.52 a*	2.52 a	4.67 a	6.51 a	10.54 a	2.03 a*	3.49 a	6.78 a	9.41 a	15.14 a
9	12	1.68 a	2.71 a	4.96 a	6.82 a	10.78 a	2.08 a	3.46 a	6.54 a	9.07 a	14.66 a	1.87 a*	2.85 a	4.97 a	6.8 a	10.82 a	2.4 a*	3.88 a	7.16 a	9.75 a	15.47 a
	16	1.4 a	2.45 a	4.71 a	6.57 a	10.54 a	1.79 a	3.15 a	6.23 a	8.78 a	14.36 a	1.66 a*	2.65 a	4.79 a	6.62 a	10.65 a	2.18 a*	3.65 a	6.93 a	9.54 a	15.27 a
	24	0.86 a	1.95 a	4.22 a	6.09 a	10.06 a	1.23 a	2.55 a	5.62 a	8.19 a	13.77 a	1.26 a*	2.26 a	4.44 a	6.28 a	10.31 a	1.75 a*	3.2 a	6.48 a	9.13 a	14.87 a
10	12	1.46 a	2.51 a	4.75 a	6.61 a	10.57 a	1.84 a	3.18 a	6.17 a	8.67 a	14.14 a	1.72 a*	2.7 a	4.84 a	6.67 a	10.69 a	2.24 a*	3.71 a	6.98 a	9.59 a	15.31 a
	16	1.13 a	2.19 a	4.44 a	6.3 a	10.26 a	1.49 a	2.81 a	5.79 a	8.3 a	13.77 a	1.47 a*	2.46 a	4.61 a	6.45 a	10.47 a	1.97 a*	3.42 a	6.7 a	9.33 a	15.06 a
	24	0.48 a	1.58 a	3.84 a	5.71 a	9.66 a	0.82 a	2.08 a	5.05 a	7.59 a	13.03 a	0.97 a*	1.98 a	4.17 a	6.01 a	10.04 a	1.43 a*	2.86 a	6.13 a	8.81 a	14.56 a
12	12	0.97 a	2.01 a	4.2 a	6.09 a	10.02 a	1.31 a	2.55 a	5.3 a	7.68 a	12.83 a	1.37 a*	2.36 a	4.51 a	6.34 a	10.36 a	1.86 a*	3.3 a	6.55 a	9.19 a	14.91 a
	16	0.53 b	1.58 a	3.77 a	5.64 a	9.55 a	0.85 a	2.04 a	4.78 a	7.17 a	12.29 a	1.02 a*	2.01 a	4.18 a	6.02 a	10.04 a	1.48 a*	2.89 a	6.13 a	8.8 a	14.53 a
	24		0.76 b	2.94 a	4.79 a	8.66 a		1.1 b	3.79 a	6.2 a	11.25 a	0.33 a*	1.34 a	3.55 a	5.39 a	9.4 a	0.73 a*	2.1 a	5.32 a	8.04 a	13.78 a
14	12	0.45 c	1.44 a	3.44 a	5.21 a	9.22 a	0.76 b	1.86 a	4.31 a	6.51 a	11.2 a	0.97 a*	1.96 a	4.11 a	5.93 a	9.94 a	1.4 a*	2.78 a	5.93 a	8.61 a	14.38 a
	16		0.91 c	2.9 b	4.65 a	8.58 a	0.21 c	1.25 b	3.67 a	5.87 a	10.5 a	0.51 a*	1.49 a	3.66 a	5.49 a	9.48 a	0.91 a*	2.24 a	5.37 a	8.08 a	13.84 a
	24			1.92 d	3.6 c	7.39 a		0.15 d	2.52 c	4.7 b	9.21 a		0.62 a	2.82 a	4.64 a	8.6 a		1.22 a	4.3 a	7.05 a	12.79 a
16	12		0.87 c	2.64 b	4.22 a	7.74 a	0.23 d	1.18 c	3.31 a	5.29 a	9.42 a	0.53 a*	1.5 a	3.63 a	5.44 a	9.4 a	0.91 a*	2.18 a	5.12 a	7.71 a	13.34 a
	16		0.29 d	2.04 d	3.57 c	6.99 a		0.5 d	2.61 c	4.57 b	8.61 a		0.93 a	3.07 a	4.87 a	8.8 a	0.31 b*	1.53 a	4.44 a	7.04 a	12.64 a
	24			0.98 e	2.42 d	5.67 c			1.37 d	3.28 d	7.16 b			2.01 b	3.78 a	7.66 a		0.32 c	3.15 a	5.77 a	11.3 a

SECTION PROPERTIES TABLE NOTES

1. Allowable axial loads listed in kips (1 kip = 1000 pounds).
2. Allowable axial loads determined in accordance with AISI S240-15, assuming that all axial loads pass through the geometric center of the section
3. Listed lateral pressures and axial loads have not been modified for 1/3 stress increase based on wind/earthquake or multiple transient loads.
4. Allowable axial loads based on lateral and torsional bracing at a maximum spacing of 4 feet on center.
5. The 5 psf live load has not been reduced for deflection checks. For 15 psf or higher wind pressure, read the note below.

IBC 2018/ASCE 7-10: Due to the change in the model building codes, design wind pressures determined using IBC 2012/ASCE 7-10 are strength level loads (LRFD) in comparison to those determined in earlier IBC codes which were service level loads (ASD). The load/span tables that follow are based on service level (ASD) wind loads. Therefore, to properly use the load/span tables in this catalog, multiply the IBC 2012/ASCE 7-10 design wind pressures by 0.6 (Reference section 2.4 ASCE 7-10) prior to entering the load/span tables.

Example:

- * ASCE 7-10 Calculated Design Wind Pressure = 25 psf (Strength level loads, LRFD)
- * Convert to service level loads (ASD) = 25 psf x 0.6 = 15 psf
- * Use 10 pfs as the Pressure Value used in this Table to determine the member span

Any Other Building Code: The load/span tables that follow are based on service level (ASD) wind loads. If the wind load being used meets this criterion, it does not need to be modified prior to using the tables.

6. Studs are assumed to be adequately braced at a maximum spacing of Lu to develop full allowable moment, Ma.
7. End supports have not been checked for web crippling. Refer web crippling capacity tables.
8. All tables are based on simple (single) span.
9. Cells marked with an " * " have h/t>200, thus require bearing stiffeners. Cells are left blank when h/t>260.
10. Cells marked with an a, b, c, d, e or f meets L/720, L/600, L/480, L/360, L/240, or L/120 respectively. Blank cells do not meet L/120.
11. Stud distortional buckling moment based on assumed Kφ = 0
12. Moment of inertia for deflection is optimized based on the maximum moment at service loads for the listed spans; therefore span values may be greater than spans based on effective moment of inertia listed in section property tables

COMBINED AXIAL AND LATERAL LOAD TABLES

30 psf Lateral Load

Wall	Spacing	362S162-(mils)					362S200-(mils)					400S162-(mils)					400S200-(mils)				
Height	(in.)	33 ksi		50 ksi			33 ksi		50 ksi			33 ksi		50 ksi			33 ksi		50 ksi		
(ft)	o.c.	33	43	54	68	97	33	43	54	68	97	33	43	54	68	97	33	43	54	68	97
8	12	0.85 a	1.59 a	3.17 a	4.38 a	6.76 a	1.13 a	2.13 a	4.06 a	5.58 a	8.4 a	1.05 a	1.86 a	3.67 a	5.18 a	7.99 a	1.35 a	2.46 a	4.68 a	6.55 a	9.9 a
	16	0.5 b	1.21 a	2.82 a	4.01 a	6.35 a	0.74 b	1.71 a	3.65 a	5.18 a	7.97 a	0.7 a	1.5 a	3.32 a	4.81 a	7.58 a	0.97 a	2.06 a	4.28 a	6.14 a	9.48 a
	24		0.52 c	2.16 b	3.32 a	5.58 a	0.02 d	0.95 b	2.89 a	4.42 a	7.17 a	0.05 c	0.81 b	2.66 a	4.1 a	6.8 a	0.26 c	1.3 a	3.52 a	5.37 a	8.66 a
9	12	0.53 c	1.21 a	2.68 a	3.77 a	5.92 a	0.76 b	1.68 a	3.44 a	4.84 a	7.41 a	0.73 b	1.49 a	3.2 a	4.6 a	7.19 a	0.99 a	2.03 a	4.09 a	5.84 a	8.94 a
	16	0.13 d	0.78 c	2.27 b	3.34 a	5.44 a	0.32 c	1.21 b	2.97 a	4.37 a	6.91 a	0.33 c	1.07 b	2.78 a	4.16 a	6.7 a	0.55 b	1.56 a	3.61 a	5.36 a	8.43 a
	24		0.02 d	1.54 d	2.57 c	4.56 a		0.37 d	2.13 c	3.51 b	5.98 a		0.28 d	2.02 c	3.33 b	5.77 a		0.7 c	2.73 b	4.45 a	7.45 a
10	12	0.23 d	0.84 c	2.18 b	3.15 a	5.06 a	0.42 c	1.25 b	2.83 a	4.09 a	6.4 a	0.41 c	1.12 b	2.7 a	3.99 a	6.33 a	0.64 b	1.59 a	3.47 a	5.1 a	7.92 a
	16		0.38 d	1.74 c	2.69 b	4.53 a		0.74 d	2.32 c	3.58 b	5.84 a		0.64 c	2.24 b	3.48 a	5.76 a	0.15 d	1.07 c	2.94 a	4.54 a	7.33 a
	24			0.96 e	1.86 d	3.58 c			1.43 d	2.66 d	4.83 b			1.4 d	2.57 c	4.73 b		0.13 d	1.98 c	3.54 c	6.24 a
12	12		0.2 e	1.29 d	2.03 d	3.46 b		0.49 d	1.73 d	2.72 c	4.49 a		0.43 d	1.75 d	2.76 c	4.6 a		0.78 d	2.31 c	3.62 b	5.88 a
	16			0.84 e	1.55 e	2.9 d			1.21 e	2.19 d	3.9 c			1.25 e	2.2 d	3.96 c		0.2 e	1.73 d	3.01 c	5.21 b
	24			0.05 f	0.71 f	1.94 e			0.32 f	1.26 e	2.86 d			0.36 f	1.23 e	2.86 d			0.71 e	1.93 e	4.02 d
14	12			0.64 f	1.2 e	2.24 d			0.92 e	1.69 e	3.03 d			0.98 e	1.73 d	3.11 c		0.13 e	1.36 e	2.36 d	4.11 c
	16			0.2 f	0.73 f	1.71 e			0.43 f	1.18 e	2.45 e			0.48 f	1.18 e	2.49 d			0.79 e	1.76 e	3.44 d
	24					0.8 f				0.31 f	1.47 f				0.25 f	1.43 e				0.74 f	2.29 e
16	12			0.19 f	0.62 f	1.39 e			0.38 f	0.98 f	1.99 e			0.42 f	0.98 e	2.03 e			0.68 f	1.45 e	2.79 d
	16				0.19 f	0.9 f				0.5 f	1.46 f				0.48 f	1.45 e			0.14 f	0.89 f	2.17 e
	24					0.07 f					0.54 f					0.46 f					1.09 f

30 psf Lateral Load

Wall	Spacing	600S162-(mils)					600S200-(mils)					800S162-(mils)					800S200-(mils)				
Height	(in.)	33 ksi		50 ksi			33 ksi		50 ksi			33 ksi		50 ksi			33 ksi		50 ksi		
(ft)	o.c.	33	43	54	68	97	33	43	54	68	97	33	43	54	68	97	33	43	54	68	97
8	12	1.73 a	2.77 a	5.02 a	6.88 a	10.84 a	2.15 a	3.56 a	6.71 a	9.27 a	14.95 a	1.9 a*	2.89 a	5.01 a	6.84 a	10.86 a	2.44 a*	3.93 a	7.21 a	9.8 a	15.52 a
	16	1.47 a	2.53 a	4.79 a	6.65 a	10.62 a	1.88 a	3.27 a	6.42 a	9 a	14.67 a	1.71 a*	2.7 a	4.84 a	6.67 a	10.7 a	2.23 a*	3.71 a	6.99 a	9.6 a	15.33 a
	24	0.95 a	2.05 a	4.33 a	6.21 a	10.18 a	1.34 a	2.69 a	5.84 a	8.45 a	14.12 a	1.33 a*	2.33 a	4.5 a	6.34 a	10.38 a	1.82 a*	3.28 a	6.57 a	9.22 a	14.96 a
9	12	1.51 a	2.56 a	4.81 a	6.67 a	10.63 a	1.9 a	3.27 a	6.35 a	8.89 a	14.48 a	1.75 a*	2.73 a	4.87 a	6.69 a	10.72 a	2.27 a*	3.74 a	7.02 a	9.63 a	15.35 a
	16	1.18 a	2.25 a	4.52 a	6.38 a	10.35 a	1.56 a	2.91 a	5.98 a	8.54 a	14.12 a	1.5 a*	2.5 a	4.65 a	6.49 a	10.51 a	2.01 a*	3.47 a	6.75 a	9.38 a	15.11 a
	24	0.54 a	1.65 a	3.94 a	5.81 a	9.78 a	0.9 a	2.2 a	5.26 a	7.85 a	13.42 a	1.02 a*	2.03 a	4.22 a	6.07 a	10.1 a	1.49 a*	2.92 a	6.21 a	8.88 a	14.64 a
10	12	1.26 a	2.32 a	4.57 a	6.43 a	10.38 a	1.63 a	2.96 a	5.94 a	8.45 a	13.92 a	1.57 a*	2.56 a	4.7 a	6.53 a	10.56 a	2.07 a*	3.54 a	6.81 a	9.43 a	15.16 a
	16	0.86 a	1.94 a	4.2 a	6.06 a	10.02 a	1.22 a	2.51 a	5.49 a	8.02 a	13.47 a	1.27 a*	2.27 a	4.44 a	6.27 a	10.3 a	1.75 a*	3.2 a	6.47 a	9.12 a	14.86 a
	24	0.11 b	1.22 a	3.5 a	5.36 a	9.31 a	0.44 a	1.67 a	4.62 a	7.18 a	12.6 a	0.68 a*	1.7 a	3.91 a	5.75 a	9.79 a	1.12 a*	2.53 a	5.8 a	8.5 a	14.26 a
12	12	0.7 a	1.75 a	3.94 a	5.82 a	9.74 a	1.03 a	2.24 a	4.98 a	7.37 a	12.5 a	1.16 a*	2.15 a	4.31 a	6.15 a	10.17 a	1.63 a*	3.05 a	6.3 a	8.95 a	14.68 a
	16	0.19 c	1.24 a	3.43 a	5.3 a	9.19 a	0.5 b	1.66 a	4.37 a	6.77 a	11.86 a	0.74 a*	1.74 a	3.93 a	5.76 a	9.78 a	1.17 a*	2.57 a	5.81 a	8.49 a	14.23 a
	24		0.31 c	2.47 b	4.31 a	8.15 a		0.57 c	3.24 b	5.65 a	10.66 a		0.95 a	3.17 a	5.02 a	9.03 a	0.31 a*	1.64 a	4.85 a	7.59 a	13.34 a
14	12	0.14 c	1.12 b	3.11 a	4.87 a	8.83 a	0.42 c	1.48 a	3.92 a	6.13 a	10.78 a	0.69 a*	1.68 a	3.84 a	5.67 a	9.66 a	1.1 a*	2.46 a	5.59 a	8.29 a	14.05 a
	16		0.52 d	2.5 c	4.21 a	8.09 a		0.79 c	3.19 b	5.39 a	9.97 a	0.15 b*	1.14 a	3.32 a	5.14 a	9.13 a	0.52 a*	1.83 a	4.94 a	7.66 a	13.41 a
	24			1.38 d	3.02 c	6.74 b			1.88 d	4.06 c	8.49 a		0.12 b	2.33 a	4.14 a	8.09 a		0.64 a	3.69 a	6.45 a	12.18 a
16	12		0.51 d	2.28 c	3.82 b	7.28 a		0.77 c	2.88 b	4.85 a	8.92 a	0.19 b*	1.15 a	3.29 a	5.09 a	9.04 a	0.54 a*	1.79 a	4.71 a	7.3 a	12.92 a
	16			1.6 d	3.09 c	6.44 b		0.01 d	2.09 d	4.03 c	8.01 a		0.49 b	2.63 a	4.42 a	8.34 a		1.03 a	3.91 a	6.52 a	12.09 a
	24			0.4 e	1.8 e	4.95 d			0.7 e	2.59 d	6.38 c			1.41 c	3.16 b	7 a			2.44 b	5.06 a	10.53 a

SECTION PROPERTIES TABLE NOTES

1. Allowable axial loads listed in kips (1 kip = 1000 pounds).
2. Allowable axial loads determined in accordance with AISI S240-15, assuming that all axial loads pass through the geometric center of the section
3. Listed lateral pressures and axial loads have not been modified for 1/3 stress increase based on wind/earthquake or multiple transient loads.
4. Allowable axial loads based on lateral and torsional bracing at a maximum spacing of 4 feet on center.
5. The 5 psf live load has not been reduced for deflection checks. For 15 psf or higher wind pressure, read the note below.

IBC 2018/ASCE 7-10: Due to the change in the model building codes, design wind pressures determined using IBC 2012/ASCE 7-10 are strength level loads (LRFD) in comparison to those determined in earlier IBC codes which were service level loads (ASD). The load/span tables that follow are based on service level (ASD) wind loads. Therefore, to properly use the load/span tables in this catalog, multiply the IBC 2012/ASCE 7-10 design wind pressures by 0.6 (Reference section 2.4 ASCE 7-10) prior to entering the load/span tables.

Example:

- * ASCE 7-10 Calculated Design Wind Pressure = 25 psf (Strength level loads, LRFD)
- * Convert to service level loads (ASD) = 25 psf x 0.6 = 15 psf
- * Use 10 pfs as the Pressure Value used in this Table to determine the member span

Any Other Building Code: The load/span tables that follow are based on service level (ASD) wind loads. If the wind load being used meets this criterion, it does not need to be modified prior to using the tables.

6. Studs are assumed to be adequately braced at a maximum spacing of Lu to develop full allowable moment, Ma.
7. End supports have not been checked for web crippling. Refer web crippling capacity tables.
8. All tables are based on simple (single) span.
9. Cells marked with an " * " have h/t>200, thus require bearing stiffeners. Cells are left blank when h/t>260.
10. Cells marked with an a, b, c, d, e or f meets L/720, L/600, L/480, L/360, L/240, or L/120 respectively. Blank cells do not meet L/120.
11. Stud distortional buckling moment based on assumed $K\varphi = 0$
12. Moment of inertia for deflection is optimized based on the maximum moment at service loads for the listed spans; therefore span values may be greater than spans based on effective moment of inertia listed in section property tables

COMBINED AXIAL AND LATERAL LOAD TABLES

35 psf Lateral Load

Wall	Spacing	362S162-(mils)					362S200-(mils)					400S162-(mils)					400S200-(mils)				
Height	(in.)	33 ksi		50 ksi			33 ksi		50 ksi			33 ksi		50 ksi			33 ksi		50 ksi		
(ft)	o.c.	33	43	54	68	97	33	43	54	68	97	33	43	54	68	97	33	43	54	68	97
8	12	0.67 b	1.4 a	2.99 a	4.19 a	6.55 a	0.93 a	1.92 a	3.85 a	5.38 a	8.18 a	0.87 a	1.68 a	3.49 a	4.99 a	7.79 a	1.16 a	2.26 a	4.48 a	6.34 a	9.69 a
	16	0.27 c	0.98 b	2.59 a	3.77 a	6.09 a	0.49 b	1.45 a	3.39 a	4.92 a	7.7 a	0.47 b	1.26 a	3.09 a	4.57 a	7.32 a	0.72 a	1.8 a	4.02 a	5.88 a	9.2 a
	24		0.2 d	1.85 c	3 b	5.21 a		0.6 c	2.54 b	4.07 a	6.78 a		0.49 c	2.34 b	3.76 a	6.43 a		0.95 b	3.15 a	5 a	8.26 a
9	12	0.33 c	0.99 b	2.47 a	3.55 a	5.68 a	0.54 c	1.44 a	3.2 a	4.6 a	7.16 a	0.52 b	1.28 a	2.99 a	4.38 a	6.94 a	0.77 b	1.79 a	3.84 a	5.6 a	8.68 a
	16		0.52 d	2.02 c	3.07 b	5.14 a	0.05 d	0.92 c	2.68 b	4.07 a	6.59 a	0.07 d	0.79 c	2.52 a	3.87 a	6.38 a	0.27 c	1.26 b	3.31 a	5.04 a	8.09 a
	24			1.2 d	2.2 d	4.15 b			1.74 d	3.12 c	5.54 a			1.66 c	2.94 c	5.34 a		0.3 d	2.32 c	4.03 b	6.99 a
10	12	0.01 e	0.6 d	1.96 c	2.92 b	4.79 a	0.17 d	0.99 c	2.57 b	3.83 a	6.11 a	0.19 d	0.88 c	2.47 b	3.73 a	6.04 a	0.39 c	1.33 b	3.2 a	4.81 a	7.62 a
	16		0.09 e	1.47 d	2.4 c	4.2 b		0.42 d	2.01 c	3.26 b	5.49 a		0.35 d	1.95 c	3.17 b	5.41 a		0.74 c	2.61 b	4.2 a	6.95 a
	24			0.61 e	1.48 e	3.15 d			1.02 e	2.24 d	4.37 c			1.02 e	2.15 d	4.26 c			1.54 d	3.08 c	5.73 b
12	12			1.06 e	1.78 d	3.17 c		0.21 e	1.46 d	2.45 d	4.19 b		0.16 e	1.49 d	2.47 c	4.27 b		0.49 d	2.01 c	3.3 c	5.54 a
	16			0.56 e	1.25 e	2.56 d			0.9 e	1.86 e	3.54 d			0.93 e	1.86 d	3.58 c			1.37 d	2.63 d	4.79 b
	24				0.34 f	1.51 e				0.84 f	2.39 e				0.79 e	2.36 e			0.26 e	1.45 e	3.48 d
14	12			0.41 f	0.96 e	1.97 e			0.67 e	1.43 e	2.73 d			0.72 e	1.45 e	2.79 d			1.06 e	2.05 d	3.76 c
	16				0.45 f	1.39 e			0.14 f	0.87 f	2.11 e			0.17 f	0.85 f	2.12 e			0.44 f	1.4 e	3.03 d
	24					0.4 f					1.03 f					0.96 f				0.28 f	1.77 e
16	12				0.39 f	1.14 f			0.14 f	0.73 f	1.72 e			0.18 f	0.72 f	1.73 e			0.4 f	1.16 e	2.47 e
	16					0.61 f				0.21 f	1.13 f				0.17 f	1.1 f				0.55 f	1.79 e
	24										0.14 f					0.03 f					0.62 f

35 psf Lateral Load

Wall	Spacing	600S162-(mils)					600S200-(mils)					800S162-(mils)					800S200-(mils)				
Height	(in.)	33 ksi		50 ksi			33 ksi		50 ksi			33 ksi		50 ksi			33 ksi		50 ksi		
(ft)	o.c.	33	43	54	68	97	33	43	54	68	97	33	43	54	68	97	33	43	54	68	97
8	12	1.6 a	2.65 a	4.9 a	6.76 a	10.73 a	2.01 a	3.41 a	6.56 a	9.13 a	14.81 a	1.81 a*	2.79 a	4.92 a	6.75 a	10.78 a	2.34 a*	3.82 a	7.1 a	9.7 a	15.42 a
	16	1.3 a	2.36 a	4.64 a	6.5 a	10.47 a	1.7 a	3.07 a	6.22 a	8.81 a	14.49 a	1.58 a*	2.58 a	4.73 a	6.56 a	10.59 a	2.1 a*	3.57 a	6.85 a	9.47 a	15.21 a
	24	0.7 a	1.81 a	4.11 a	5.99 a	9.97 a	1.07 a	2.41 a	5.55 a	8.18 a	13.85 a	1.14 a*	2.15 a	4.34 a	6.18 a	10.22 a	1.62 a*	3.07 a	6.36 a	9.02 a	14.78 a
9	12	1.34 a	2.4 a	4.66 a	6.52 a	10.49 a	1.73 a	3.09 a	6.17 a	8.72 a	14.3 a	1.62 a*	2.61 a	4.76 a	6.59 a	10.62 a	2.14 a*	3.61 a	6.89 a	9.5 a	15.23 a
	16	0.96 a	2.05 a	4.32 a	6.19 a	10.16 a	1.34 a	2.67 a	5.74 a	8.31 a	13.89 a	1.34 a*	2.34 a	4.51 a	6.35 a	10.38 a	1.83 a*	3.29 a	6.57 a	9.21 a	14.95 a
	24	0.24 a	1.36 a	3.66 a	5.53 a	9.5 a	0.58 a	1.85 a	4.9 a	7.52 a	13.07 a	0.78 a*	1.8 a	4.01 a	5.86 a	9.9 a	1.23 a*	2.66 a	5.94 a	8.64 a	14.4 a
10	12	1.06 a	2.13 a	4.38 a	6.24 a	10.2 a	1.42 a	2.73 a	5.71 a	8.23 a	13.69 a	1.42 a*	2.41 a	4.57 a	6.4 a	10.43 a	1.91 a*	3.37 a	6.64 a	9.28 a	15.01 a
	16	0.61 a	1.7 a	3.96 a	5.82 a	9.78 a	0.95 a	2.23 a	5.19 a	7.73 a	13.18 a	1.07 a*	2.08 a	4.26 a	6.1 a	10.13 a	1.54 a*	2.97 a	6.25 a	8.91 a	14.66 a
	24		0.88 a	3.15 a	5.02 a	8.96 a	0.07 b	1.26 a	4.2 a	6.77 a	12.18 a	0.4 a*	1.42 a	3.65 a	5.5 a	9.53 a	0.81 a*	2.2 a	5.47 a	8.2 a	13.96 a
12	12	0.44 b	1.49 a	3.68 a	5.56 a	9.46 a	0.76 a	1.94 a	4.67 a	7.07 a	12.18 a	0.95 a*	1.94 a	4.12 a	5.95 a	9.97 a	1.4 a*	2.81 a	6.05 a	8.72 a	14.45 a
	16		0.92 b	3.1 a	4.96 a	8.84 a	0.16 c	1.28 a	3.98 a	6.39 a	11.45 a	0.47 a*	1.47 a	3.67 a	5.51 a	9.53 a	0.88 a*	2.26 a	5.48 a	8.19 a	13.93 a
	24			2.03 c	3.84 b	7.66 a		0.06 c	2.7 b	5.12 a	10.08 a		0.56 a	2.81 a	4.65 a	8.66 a		1.18 a	4.38 a	7.15 a	12.9 a
14	12		0.81 c	2.8 b	4.54 a	8.45 a	0.1 c	1.13 b	3.55 a	5.75 a	10.37 a	0.42 a*	1.4 a	3.58 a	5.4 a	9.39 a	0.81 a*	2.14 a	5.26 a	7.97 a	13.73 a
	16		0.14 d	2.11 c	3.8 b	7.62 a		0.36 d	2.74 c	4.93 b	9.46 a		0.79 a	2.98 a	4.8 a	8.78 a	0.15 b*	1.42 a	4.51 a	7.25 a	13 a
	24			0.87 e	2.48 d	6.11 c			1.28 d	3.44 d	7.8 b			1.85 b	3.66 a	7.59 a		0.08 b	3.1 a	5.88 a	11.58 a
16	12		0.17 d	1.93 d	3.45 c	6.85 a		0.38 d	2.48 c	4.43 b	8.46 a		0.81 b	2.96 a	4.75 a	8.69 a	0.19 b*	1.41 a	4.3 a	6.91 a	12.5 a
	16			1.18 e	2.64 d	5.92 c			1.6 d	3.53 c	7.44 b		0.07 c	2.22 b	3.99 a	7.88 a		0.55 b	3.4 a	6.02 a	11.56 a
	24				1.22 e	4.28 d			0.08 e	1.94 e	5.64 d			0.84 d	2.57 c	6.36 a			1.75 c	4.37 b	9.79 a

SECTION PROPERTIES TABLE NOTES

1. Allowable axial loads listed in kips (1 kip = 1000 pounds).
2. Allowable axial loads determined in accordance with AISI S240-15, assuming that all axial loads pass through the geometric center of the section
3. Listed lateral pressures and axial loads have not been modified for 1/3 stress increase based on wind/earthquake or multiple transient loads.
4. Allowable axial loads based on lateral and torsional bracing at a maximum spacing of 4 feet on center.
5. The 5 psf live load has not been reduced for deflection checks. For 15 psf or higher wind pressure, read the note below.

IBC 2018/ASCE 7-10: Due to the change in the model building codes, design wind pressures determined using IBC 2012/ASCE 7-10 are strength level loads (LRFD) in comparison to those determined in earlier IBC codes which were service level loads (ASD). The load/span tables that follow are based on service level (ASD) wind loads. Therefore, to properly use the load/span tables in this catalog, multiply the IBC 2012/ASCE 7-10 design wind pressures by 0.6 (Reference section 2.4 ASCE 7-10) prior to entering the load/span tables.

Example:

- * ASCE 7-10 Calculated Design Wind Pressure = 25 psf (Strength level loads, LRFD)
- * Convert to service level loads (ASD) = 25 psf x 0.6 = 15 psf
- * Use 10 pfs as the Pressure Value used in this Table to determine the member span

Any Other Building Code: The load/span tables that follow are based on service level (ASD) wind loads. If the wind load being used meets this criterion, it does not need to be modified prior to using the tables.

6. Studs are assumed to be adequately braced at a maximum spacing of Lu to develop full allowable moment, Ma.
7. End supports have not been checked for web crippling. Refer web crippling capacity tables.
8. All tables are based on simple (single) span.
9. Cells marked with an " * " have h/t>200, thus require bearing stiffeners. Cells are left blank when h/t>260.
10. Cells marked with an a, b, c, d, e or f meets L/720, L/600, L/480, L/360, L/240, or L/120 respectively. Blank cells do not meet L/120.
11. Stud distortional buckling moment based on assumed $K\varphi = 0$
12. Moment of inertia for deflection is optimized based on the maximum moment at service loads for the listed spans; therefore span values may be greater than spans based on effective moment of inertia listed in section property tables

COMBINED AXIAL AND LATERAL LOAD TABLES

40 psf Lateral Load

Wall	Spacing	362S162-(mils)					362S200-(mils)					400S162-(mils)					400S200-(mils)				
Height	(in.)	33 ksi		50 ksi			33 ksi		50 ksi			33 ksi		50 ksi			33 ksi		50 ksi		
(ft)	o.c.	33	43	54	68	97	33	43	54	68	97	33	43	54	68	97	33	43	54	68	97
8	12	0.5 b	1.21 a	2.82 a	4.01 a	6.35 a	0.74 b	1.71 a	3.65 a	5.18 a	7.97 a	0.7 a	1.5 a	3.32 a	4.81 a	7.58 a	0.97 a	2.06 a	4.28 a	6.14 a	9.48 a
	16	0.06 d	0.75 c	2.37 b	3.54 a	5.83 a	0.25 c	1.2 b	3.14 a	4.67 a	7.43 a	0.26 c	1.03 a	2.87 a	4.33 a	7.06 a	0.49 b	1.55 a	3.76 a	5.62 a	8.93 a
	24			1.56 d	2.68 c	4.85 a		0.26 d	2.19 c	3.72 b	6.41 a		0.17 c	2.04 b	3.44 a	6.06 a		0.61 c	2.8 b	4.64 a	7.88 a
9	12	0.13 d	0.78 c	2.27 b	3.34 a	5.44 a	0.32 c	1.21 b	2.97 a	4.37 a	6.91 a	0.33 c	1.07 b	2.78 a	4.16 a	6.7 a	0.55 b	1.56 a	3.61 a	5.36 a	8.43 a
	16		0.26 d	1.77 c	2.82 b	4.84 a		0.64 c	2.4 c	3.79 a	6.28 a		0.53 c	2.26 b	3.6 a	6.07 a		0.97 b	3.01 a	4.74 a	7.77 a
	24			0.87 e	1.86 d	3.75 c			1.36 d	2.74 c	5.12 b			1.32 d	2.57 c	4.92 b			1.93 c	3.62 b	6.55 a
10	12		0.38 d	1.74 c	2.69 b	4.53 a		0.74 d	2.32 c	3.58 b	5.84 a		0.64 c	2.24 b	3.48 a	5.76 a	0.15 d	1.07 c	2.94 a	4.54 a	7.33 a
	16			1.21 d	2.12 d	3.89 b		0.13 e	1.71 d	2.95 c	5.15 a		0.06 d	1.67 d	2.86 c	5.06 a		0.43 d	2.29 c	3.86 b	6.59 a
	24			0.27 e	1.12 e	2.73 d			0.64 e	1.85 e	3.92 c			0.66 e	1.75 d	3.8 c			1.13 d	2.64 d	5.25 b
12	12			0.84 e	1.55 e	2.9 d			1.21 e	2.19 d	3.9 c			1.25 e	2.2 d	3.96 c		0.2 e	1.73 d	3.01 c	5.21 b
	16			0.3 f	0.98 e	2.24 e			0.6 e	1.55 e	3.19 d			0.64 e	1.54 e	3.21 d			1.03 e	2.27 d	4.4 c
	24					1.1 f				0.45 f	1.95 e				0.38 f	1.89 e				1 e	2.97 e
14	12			0.2 f	0.73 f	1.71 e			0.43 f	1.18 e	2.45 e			0.48 f	1.18 e	2.49 d			0.79 e	1.76 e	3.44 d
	16				0.19 f	1.09 f				0.58 f	1.78 e				0.54 f	1.76 e			0.12 f	1.06 e	2.65 e
	24					0.02 f					0.62 f					0.51 f					1.29 f
16	12				0.19 f	0.9 f				0.5 f	1.46 f				0.48 f	1.45 e			0.14 f	0.89 f	2.17 e
	16					0.33 f					0.83 f					0.77 f				0.24 f	1.43 f
	24																				0.17 f

40 psf Lateral Load

Wall	Spacing	600S162-(mils)					600S200-(mils)					800S162-(mils)					800S200-(mils)				
Height	(in.)	33 ksi		50 ksi			33 ksi		50 ksi			33 ksi		50 ksi			33 ksi		50 ksi		
(ft)	o.c.	33	43	54	68	97	33	43	54	68	97	33	43	54	68	97	33	43	54	68	97
8	12	1.47 a	2.53 a	4.79 a	6.65 a	10.62 a	1.88 a	3.27 a	6.42 a	9 a	14.67 a	1.71 a*	2.7 a	4.84 a	6.67 a	10.7 a	2.23 a*	3.71 a	6.99 a	9.6 a	15.33 a
	16	1.12 a	2.2 a	4.48 a	6.35 a	10.33 a	1.52 a	2.88 a	6.03 a	8.63 a	14.3 a	1.46 a*	2.45 a	4.62 a	6.45 a	10.49 a	1.96 a*	3.42 a	6.71 a	9.34 a	15.08 a
	24	0.45 a	1.58 a	3.89 a	5.77 a	9.75 a	0.81 a	2.13 a	5.27 a	7.92 a	13.58 a	0.95 a*	1.97 a	4.17 a	6.02 a	10.06 a	1.42 a*	2.85 a	6.15 a	8.83 a	14.59 a
9	12	1.18 a	2.25 a	4.52 a	6.38 a	10.35 a	1.56 a	2.91 a	5.98 a	8.54 a	14.12 a	1.5 a*	2.5 a	4.65 a	6.49 a	10.51 a	2.01 a*	3.47 a	6.75 a	9.38 a	15.11 a
	16	0.75 a	1.85 a	4.13 a	6 a	9.97 a	1.12 a	2.43 a	5.49 a	8.08 a	13.65 a	1.18 a*	2.19 a	4.37 a	6.21 a	10.24 a	1.66 a*	3.11 a	6.39 a	9.05 a	14.79 a
	24		1.07 a	3.38 a	5.26 a	9.22 a	0.27 a	1.51 a	4.55 a	7.18 a	12.73 a	0.55 a*	1.57 a	3.8 a	5.66 a	9.69 a	0.98 a*	2.39 a	5.68 a	8.39 a	14.16 a
10	12	0.86 a	1.94 a	4.2 a	6.06 a	10.02 a	1.22 a	2.51 a	5.49 a	8.02 a	13.47 a	1.27 a*	2.27 a	4.44 a	6.27 a	10.3 a	1.75 a*	3.2 a	6.47 a	9.12 a	14.86 a
	16	0.36 a	1.46 a	3.73 a	5.59 a	9.54 a	0.69 a	1.94 a	4.9 a	7.45 a	12.89 a	0.88 a*	1.89 a	4.08 a	5.93 a	9.96 a	1.33 a*	2.75 a	6.02 a	8.71 a	14.46 a
	24		0.54 b	2.82 a	4.68 a	8.61 a		0.86 a	3.78 a	6.37 a	11.76 a	0.11 a*	1.14 a	3.39 a	5.24 a	9.28 a	0.51 a*	1.88 a	5.14 a	7.89 a	13.67 a
12	12	0.19 c	1.24 a	3.43 a	5.3 a	9.19 a	0.5 b	1.66 a	4.37 a	6.77 a	11.86 a	0.74 a*	1.74 a	3.93 a	5.76 a	9.78 a	1.17 a*	2.57 a	5.81 a	8.49 a	14.23 a
	16		0.61 c	2.78 b	4.63 a	8.49 a		0.92 b	3.6 a	6.01 a	11.05 a	0.2 a*	1.21 a	3.42 a	5.26 a	9.28 a	0.59 a*	1.94 a	5.16 a	7.89 a	13.63 a
	24			1.59 d	3.39 c	7.17 a			2.19 c	4.6 b	9.52 a		0.18 a	2.45 a	4.29 a	8.29 a		0.74 a	3.92 a	6.72 a	12.47 a
14	12		0.52 d	2.5 c	4.21 a	8.09 a		0.79 c	3.19 b	5.39 a	9.97 a	0.15 b*	1.14 a	3.32 a	5.14 a	9.13 a	0.52 a*	1.83 a	4.94 a	7.66 a	13.41 a
	16			1.74 d	3.41 c	7.17 a			2.3 c	4.48 b	8.96 a		0.45 b	2.65 a	4.47 a	8.43 a		1.03 a	4.1 a	6.85 a	12.58 a
	24			0.38 e	1.95 d	5.51 c			0.71 e	2.85 d	7.15 c			1.39 c	3.19 a	7.1 a			2.52 b	5.31 a	11 a
16	12			1.6 d	3.09 c	6.44 b		0.01 d	2.09 d	4.03 c	8.01 a		0.49 b	2.63 a	4.42 a	8.34 a		1.03 a	3.91 a	6.52 a	12.09 a
	16			0.78 e	2.21 d	5.43 c			1.14 e	3.05 d	6.9 c			1.81 c	3.57 a	7.44 a		0.09 c	2.91 b	5.53 a	11.04 a
	24				0.67 e	3.65 e				1.32 e	4.94 d			0.29 d	2 c	5.75 b			1.09 d	3.71 c	9.08 a

SECTION PROPERTIES TABLE NOTES

1. Allowable axial loads listed in kips (1 kip = 1000 pounds).
2. Allowable axial loads determined in accordance with AISI S240-15, assuming that all axial loads pass through the geometric center of the section
3. Listed lateral pressures and axial loads have not been modified for 1/3 stress increase based on wind/earthquake or multiple transient loads.
4. Allowable axial loads based on lateral and torsional bracing at a maximum spacing of 4 feet on center.
5. The 5 psf live load has not been reduced for deflection checks. For 15 psf or higher wind pressure, read the note below.

IBC 2018/ASCE 7-10: Due to the change in the model building codes, design wind pressures determined using IBC 2012/ASCE 7-10 are strength level loads (LRFD) in comparison to those determined in earlier IBC codes which were service level loads (ASD). The load/span tables that follow are based on service level (ASD) wind loads. Therefore, to properly use the load/span tables in this catalog, multiply the IBC 2012/ASCE 7-10 design wind pressures by 0.6 (Reference section 2.4 ASCE 7-10) prior to entering the load/span tables.

Example:

- * ASCE 7-10 Calculated Design Wind Pressure = 25 psf (Strength level loads, LRFD)
- * Convert to service level loads (ASD) = 25 psf x 0.6 = 15 psf
- * Use 10 pfs as the Pressure Value used in this Table to determine the member span

Any Other Building Code: The load/span tables that follow are based on service level (ASD) wind loads. If the wind load being used meets this criterion, it does not need to be modified prior to using the tables.

6. Studs are assumed to be adequately braced at a maximum spacing of Lu to develop full allowable moment, Ma.
7. End supports have not been checked for web crippling. Refer web crippling capacity tables.
8. All tables are based on simple (single) span.
9. Cells marked with an " * " have h/t>200, thus require bearing stiffeners. Cells are left blank when h/t>260.
10. Cells marked with an a, b, c, d, e or f meets L/720, L/600, L/480, L/360, L/240, or L/120 respectively. Blank cells do not meet L/120.
11. Stud distortional buckling moment based on assumed $K\varphi = 0$
12. Moment of inertia for deflection is optimized based on the maximum moment at service loads for the listed spans; therefore span values may be greater than spans based on effective moment of inertia listed in section property tables

COMBINED AXIAL AND LATERAL LOAD TABLES

50 psf Lateral Load																						
Wall	Spacing	362S162-(mils)					362S200-(mils)					400S162-(mils)					400S200-(mils)				
Height	(in.)	33 ksi		50 ksi			33 ksi		50 ksi			33 ksi		50 ksi			33 ksi		50 ksi		
(ft)	o.c.	33	43	54	68	97	33	43	54	68	97	33	43	54	68	97	33	43	54	68	97
8	12	0.16 c	0.86 b	2.48 a	3.66 a	5.96 a	0.37 c	1.33 a	3.26 a	4.79 a	7.56 a	0.37 b	1.15 a	2.98 a	4.45 a	7.19 a	0.6 b	1.67 a	3.89 a	5.75 a	9.06 a
	16		0.31 d	1.96 c	3.1 b	5.33 a		0.72 c	2.65 b	4.18 a	6.91 a		0.59 c	2.45 a	3.87 a	6.55 a	0.03 c	1.07 b	3.27 a	5.12 a	8.39 a
	24			0.99 d	2.08 d	4.17 b			1.54 d	3.06 c	5.69 a			1.46 c	2.81 c	5.35 a			2.13 c	3.95 b	7.14 a
9	12		0.39 d	1.89 c	2.94 b	4.99 a		0.78 c	2.54 b	3.93 a	6.43 a		0.66 c	2.39 b	3.73 a	6.22 a	0.14 c	1.12 b	3.16 a	4.89 a	7.93 a
	16			1.31 d	2.32 c	4.28 b		0.1 d	1.86 d	3.25 c	5.68 a		0.04 d	1.78 c	3.07 b	5.48 a		0.43 c	2.46 c	4.17 a	7.15 a
	24			0.27 e	1.21 e	3.01 d			0.67 e	2.02 d	4.33 c			0.68 e	1.87 d	4.12 c			1.19 d	2.84 c	5.7 b
10	12			1.34 d	2.26 c	4.04 b		0.27 d	1.86 d	3.1 c	5.32 a		0.2 d	1.81 c	3.01 b	5.23 a		0.59 d	2.45 c	4.03 b	6.77 a
	16			0.72 e	1.61 d	3.29 c			1.15 e	2.38 d	4.52 c			1.15 d	2.29 d	4.41 b			1.69 d	3.23 c	5.9 a
	24				0.45 e	1.96 e				1.11 e	3.09 d				1 e	2.95 d			0.35 e	1.82 e	4.33 c
12	12			0.43 f	1.11 e	2.4 d			0.74 e	1.7 e	3.36 d			0.78 e	1.69 e	3.39 d			1.2 e	2.45 d	4.59 c
	16				0.46 f	1.65 e			0.05 f	0.98 e	2.55 e			0.09 f	0.93 e	2.52 e			0.41 e	1.61 e	3.66 d
	24					0.34 f					1.13 f					1.01 f				0.16 f	2.03 e
14	12				0.32 f	1.24 f				0.72 f	1.94 e			0.03 f	0.7 f	1.94 e			0.28 f	1.23 e	2.84 e
	16					0.53 f				0.05 f	1.17 f					1.11 f				0.43 f	1.94 e
	24																				0.4 f
16	12					0.47 f				0.08 f	0.98 f				0.02 f	0.94 f				0.39 f	1.6 f
	16										0.27 f					0.17 f					0.77 f
	24																				

50 psf Lateral Load																						
Wall	Spacing	600S162-(mils)					600S200-(mils)					800S162-(mils)					800S200-(mils)				
Height	(in.)	33 ksi		50 ksi			33 ksi		50 ksi			33 ksi		50 ksi			33 ksi		50 ksi		
(ft)	o.c.	33	43	54	68	97	33	43	54	68	97	33	43	54	68	97	33	43	54	68	97
8	12	1.21 a	2.28 a	4.56 a	6.43 a	10.4 a	1.6 a	2.98 a	6.12 a	8.72 a	14.4 a	1.52 a*	2.52 a	4.67 a	6.51 a	10.54 a	2.03 a*	3.49 a	6.78 a	9.41 a	15.14 a
	16	0.78 a	1.89 a	4.18 a	6.06 a	10.04 a	1.16 a	2.5 a	5.64 a	8.27 a	13.94 a	1.2 a*	2.21 a	4.39 a	6.24 a	10.27 a	1.69 a*	3.14 a	6.43 a	9.09 a	14.84 a
	24		1.12 a	3.45 a	5.34 a	9.32 a	0.3 a	1.58 a	4.71 a	7.39 a	13.05 a	0.58 a*	1.61 a	3.84 a	5.7 a	9.74 a	1.01 a*	2.43 a	5.73 a	8.45 a	14.22 a
9	12	0.86 a	1.95 a	4.22 a	6.09 a	10.06 a	1.23 a	2.55 a	5.62 a	8.19 a	13.77 a	1.26 a*	2.26 a	4.44 a	6.28 a	10.31 a	1.75 a*	3.2 a	6.48 a	9.13 a	14.87 a
	16	0.34 a	1.46 a	3.75 a	5.62 a	9.59 a	0.69 a	1.97 a	5.02 a	7.63 a	13.19 a	0.86 a*	1.88 a	4.08 a	5.93 a	9.97 a	1.32 a*	2.75 a	6.03 a	8.72 a	14.48 a
	24		0.52 b	2.84 a	4.72 a	8.68 a		0.85 a	3.87 a	6.53 a	12.06 a	0.09 a*	1.12 a	3.39 a	5.25 a	9.29 a	0.48 a*	1.86 a	5.15 a	7.9 a	13.69 a
10	12	0.48 a	1.58 a	3.84 a	5.71 a	9.66 a	0.82 a	2.08 a	5.05 a	7.59 a	13.03 a	0.97 a*	1.98 a	4.17 a	6.01 a	10.04 a	1.43 a*	2.86 a	6.13 a	8.81 a	14.56 a
	16		0.99 a	3.27 a	5.13 a	9.07 a	0.19 b	1.39 a	4.33 a	6.9 a	12.32 a	0.49 a*	1.51 a	3.73 a	5.58 a	9.62 a	0.91 a*	2.31 a	5.58 a	8.3 a	14.06 a
	24			2.17 b	4.03 a	7.94 a		0.1 b	2.99 a	5.59 a	10.94 a		0.59 a	2.88 a	4.74 a	8.77 a		1.24 a	4.5 a	7.29 a	13.08 a
12	12		0.76 b	2.94 a	4.79 a	8.66 a		1.1 b	3.79 a	6.2 a	11.25 a	0.33 a*	1.34 a	3.55 a	5.39 a	9.4 a	0.73 a*	2.1 a	5.32 a	8.04 a	13.78 a
	16		0.01 d	2.17 c	4 b	7.82 a		0.23 c	2.88 b	5.29 a	10.27 a		0.69 a	2.93 a	4.77 a	8.78 a	0.02 a*	1.33 a	4.53 a	7.3 a	13.05 a
	24			0.77 d	2.53 d	6.25 b			1.22 d	3.62 c	8.45 a			1.74 a	3.58 a	7.56 a			3.03 a	5.87 a	11.62 a
14	12			1.92 d	3.6 c	7.39 a		0.15 d	2.52 c	4.7 b	9.21 a		0.62 a	2.82 a	4.64 a	8.6 a		1.22 a	4.3 a	7.05 a	12.79 a
	16			1.03 e	2.66 d	6.32 c			1.48 d	3.64 c	8.03 b			2.01 b	3.82 a	7.76 a		0.26 b	3.29 a	6.07 a	11.78 a
	24				0.97 e	4.39 d				1.75 e	5.91 d			0.5 d	2.27 c	6.14 a			1.42 c	4.22 b	9.86 a
16	12			0.98 e	2.42 d	5.67 c			1.37 d	3.28 d	7.16 b			2.01 b	3.78 a	7.66 a		0.32 c	3.15 a	5.77 a	11.3 a
	16			0.04 f	1.41 e	4.5 d			0.28 e	2.15 e	5.88 d			1.03 d	2.77 c	6.57 a			1.97 c	4.6 b	10.04 a
	24					2.47 e				0.18 f	3.64 e				0.91 d	4.57 c				2.45 d	7.71 b

SECTION PROPERTIES TABLE NOTES

1. Allowable axial loads listed in kips (1 kip = 1000 pounds).
2. Allowable axial loads determined in accordance with AISI S240-15, assuming that all axial loads pass through the geometric center of the section
3. Listed lateral pressures and axial loads have not been modified for 1/3 stress increase based on wind/earthquake or multiple transient loads.
4. Allowable axial loads based on lateral and torsional bracing at a maximum spacing of 4 feet on center.
5. The 5 psf live load has not been reduced for deflection checks. For 15 psf or higher wind pressure, read the note below.

IBC 2018/ASCE 7-10: Due to the change in the model building codes, design wind pressures determined using IBC 2012/ASCE 7-10 are strength level loads (LRFD) in comparison to those determined in earlier IBC codes which were service level loads (ASD). The load/span tables that follow are based on service level (ASD) wind loads. Therefore, to properly use the load/span tables in this catalog, multiply the IBC 2012/ASCE 7-10 design wind pressures by 0.6 (Reference section 2.4 ASCE 7-10) prior to entering the load/span tables.

Example:

- * ASCE 7-10 Calculated Design Wind Pressure = 25 psf (Strength level loads, LRFD)
- * Convert to service level loads (ASD) = 25 psf x 0.6 = 15 psf
- * Use 10 pfs as the Pressure Value used in this Table to determine the member span

Any Other Building Code: The load/span tables that follow are based on service level (ASD) wind loads. If the wind load being used meets this criterion, it does not need to be modified prior to using the tables.

6. Studs are assumed to be adequately braced at a maximum spacing of Lu to develop full allowable moment, Ma.
7. End supports have not been checked for web crippling. Refer web crippling capacity tables.
8. All tables are based on simple (single) span.
9. Cells marked with an " * " have h/t>200, thus require bearing stiffeners. Cells are left blank when h/t>260.
10. Cells marked with an a, b, c, d, e or f meets L/720, L/600, L/480, L/360, L/240, or L/120 respectively. Blank cells do not meet L/120.
11. Stud distortional buckling moment based on assumed $K\varphi = 0$
12. Moment of inertia for deflection is optimized based on the maximum moment at service loads for the listed spans; therefore span values may be greater than spans based on effective moment of inertia listed in section property tables

FLOOR JOIST SPAN TABLES

10 psf Dead Load and 20 psf Live Load													
		Live Load Deflection L/360						Live Load Deflection L/480					
		Single Span			Two Equal Spans			Single Span			Two Equal Spans		
		Spacing (in) o.c.			Spacing (in) o.c.			Spacing (in) o.c.			Spacing (in) o.c.		
Member	Fy (ksi)	12	16	24	12	16	24	12	16	24	12	16	24
600S162-33	33	14'6"	12'7"e	10'3"e	14'6"i	12'7"i	10'3"a	14'4"	12'7"e	10'3"e	14'6"i	12'7"i	10'3"a
600S200-33	33	15'6"	13'5"e	10'11"e	15'6"i	13'5"i	10'11"a	15'0"	13'5"e	10'11"e	15'6"i	13'5"i	10'11"a
600S162-43	33	17'2"	15'6"	12'8"	17'11"i	15'6"i	12'8"i	15'7"	14'2"	12'5"	17'6"i	15'6"i	12'8"i
600S200-43	33	18'0"	16'0"	13'1"	18'6"i	16'0"i	13'1"i	16'5"	14'11"	13'0"	18'5"i	16'0"i	13'1"i
600S250-43	33	18'11"	16'5"	13'5"e	19'0"i	16'5"i	13'5"i	17'2"	15'7"	13'5"e	19'0"i	16'5"i	13'5"i
600S162-54	50	18'5"	16'9"	14'7"	20'8"	18'9"i	16'5"i	16'9"	15'2"	13'3"	18'9"	17'1"	14'11"i
600S200-54	50	19'4"	17'7"	15'4"	21'9"	19'9"i	17'3"i	17'7"	16'0"	14'0"	19'9"	17'11"	15'8"i
600S250-54	50	20'2"	18'4"	16'0"	22'8"	20'7"i	17'10"i	18'4"	16'8"	14'7"	20'7"	18'9"	16'4"i
600S162-68	50	19'9"	17'11"	15'8"	22'2"	20'2"	17'7"	17'11"	16'4"	14'3"	20'2"	18'4"	16'0"
600S200-68	50	20'9"	18'10"	16'6"	23'4"	21'2"	18'6"	18'10"	17'2"	15'0"	21'2"	19'3"	16'10"
600S250-68	50	21'9"	19'9"	17'3"	24'5"	22'3"	19'5"i	19'9"	18'0"	15'8"	22'3"	20'2"	17'8"
600S162-97	50	21'11"	19'11"	17'4"	24'7"	22'4"	19'6"	19'11"	18'1"	15'9"	22'4"	20'3"	17'9"
600S200-97	50	23'1"	20'11"	18'4"	25'11"	23'6"	20'7"	20'11"	19'0"	16'8"	23'6"	21'4"	18'8"
600S250-97	50	24'3"	22'0"	19'3"	27'2"	24'8"	21'7"	22'0"	20'0"	17'6"	24'8"	22'5"	19'7"
800S162-33	33	16'9"e	14'6"e	11'10"e	16'9"a	14'0"a	10'6"a	16'9"e	14'6"e	11'10"e	16'9"a	14'0"a	10'6"a
800S200-33	33	18'0"e	15'7"e	12'8"e	17'10"a	14'7"a	10'10"a	18'0"e	15'7"e	12'8"e	17'10"a	14'7"a	10'10"a
800S162-43	33	20'2"	17'6"	14'3"e	20'2"i	17'6"i	14'3"i	19'6"	17'6"	14'3"e	20'2"i	17'6"i	14'3"i
800S200-43	33	21'7"	18'8"	15'3"e	21'7"i	18'8"i	15'3"a	20'7"	18'8"	15'3"e	21'7"i	18'8"i	15'3"a
800S250-43	33	22'2"	19'2"e	15'8"e	22'2"i	19'2"i	15'8"a	21'5"	19'2"e	15'8"e	22'2"i	19'2"i	15'8"a
800S162-54	50	23'1"	20'11"	18'3"	25'10"i	23'5"i	19'1"i	20'11"	19'0"	16'7"	23'6"	21'4"i	18'8"i
800S200-54	50	24'4"	22'1"	19'4"	27'3"i	24'10"i	20'5"i	22'1"	20'1"	17'6"	24'10"	22'6"i	19'8"i
800S250-54	50	25'3"	22'11"	20'1"	28'4"i	25'7"i	20'10"i	22'11"	20'10"	18'3"	25'9"	23'5"i	20'5"i
800S162-68	50	24'11"	22'8"	19'9"	28'0"	25'5"i	22'2"i	22'8"	20'7"	18'0"	25'5"	23'1"	20'2"i
800S200-68	50	26'1"	23'9"	20'9"	29'4"	26'8"	23'3"i	23'9"	21'7"	18'10"	26'8"	24'2"	21'2"
800S250-68	50	27'3"	24'9"	21'7"	30'7"	27'9"i	24'3"i	24'9"	22'6"	19'8"	27'9"	25'3"	22'1"i
800S162-97	50	27'8"	25'2"	22'0"	31'1"	28'3"	24'8"	25'2"	22'10"	20'0"	28'3"	25'8"	22'5"
800S200-97	50	29'0"	26'5"	23'1"	32'7"	29'7"	25'11"	26'5"	24'0"	20'11"	29'7"	26'11"	23'6"
800S250-97	50	30'4"	27'7"	24'1"	34'1"	30'11"	27'1"	27'7"	25'1"	21'11"	30'11"	28'2"	24'7"
1000S162-43	33	22'4"e	19'4"e	15'10"e	22'4"a	19'4"a	15'9"a	22'4"e	19'4"e	15'10"e	22'4"a	19'4"a	15'9"a
1000S200-43	33	24'1"e	20'11"e	17'1"e	24'1"a	20'11"a	16'6"a	24'1"e	20'11"e	17'1"e	24'1"a	20'11"a	16'6"a
1000S250-43	33	24'10"e	21'6"e	17'6"e	24'10"a	21'6"a	16'9"a	24'10"e	21'6"e	17'6"e	24'10"a	21'6"a	16'9"a
1000S162-54	50	27'5"	24'10"	21'2"	30'0"i	25'11"i	21'2"i	24'10"	22'7"	19'9"	27'11"i	25'4"i	21'2"i
1000S200-54	50	28'8"	26'0"	22'9"	32'2"i	27'11"i	22'9"i	26'0"	23'8"	20'8"	29'3"i	26'7"i	22'9"i
1000S250-54	50	30'3"	27'6"	23'5"	33'1"i	28'8"i	23'5"i	27'6"	25'0"	21'10"	30'10"i	28'0"i	23'5"i
1000S162-68	50	29'8"	27'0"	23'7"	33'4"i	30'3"i	25'0"i	27'0"	24'6"	21'5"	30'3"	27'6"i	24'0"i
1000S200-68	50	31'0"	28'2"	24'7"	34'10"i	31'8"i	26'9"i	28'2"	25'7"	22'4"	31'8"	28'9"	25'1"i
1000S250-68	50	32'6"	29'7"	25'10"	36'6"i	33'2"i	27'6"i	29'7"	26'10"	23'5"	33'2"	30'2"i	26'4"i
1000S162-97	50	33'4"	30'4"	26'6"	37'5"	34'0"	29'9"	30'4"	27'6"	24'1"	34'0"	30'11"	27'0"
1000S200-97	50	34'10"	31'8"	27'8"	39'1"	35'6"	31'0"	31'8"	28'9"	25'1"	35'6"	32'3"	28'2"
1000S250-97	50	36'3"	32'11"	28'9"	40'9"	37'0"	32'4"	32'11"	29'11"	26'2"	37'0"	33'7"	29'4"
1200S162-54	50	31'6"e	27'11"e	22'10"e	32'3"a	27'11"a	22'10"a	28'7"e	26'0"e	22'9"e	32'2"a	27'11"a	22'10"a
1200S200-54	50	32'11"e	29'11"e	24'8"e	34'11"a	30'3"a	24'8"a	29'11"e	27'2"e	23'9"e	33'7"a	30'3"a	24'8"a
1200S250-54	50	34'3"e	31'2"e	25'6"e	36'0"a	31'2"a	25'6"a	31'2"e	28'4"e	24'9"e	35'0"a	31'2"a	25'6"a
1200S162-68	50	34'3"	31'1"	27'1"	38'4"i	33'3"i	27'1"i	31'1"	28'3"	24'8"	34'11"i	31'9"i	27'1"i
1200S200-68	50	35'9"	32'5"	28'4"	40'1"i	35'9"i	29'2"i	32'5"	29'6"	25'9"	36'5"	33'1"i	28'11"i
1200S250-68	50	37'3"	33'10"	29'6"	41'9"i	36'11"i	30'1"i	33'10"	30'9"	26'10"	37'11"i	34'6"i	30'1"i
1200S162-97	50	38'10"	35'3"	30'10"	43'7"	39'7"	34'7"i	35'3"	32'0"	28'0"	39'7"	36'0"	31'5"
1200S200-97	50	40'5"	36'8"	32'1"	45'4"	41'3"	36'0"i	36'8"	33'4"	29'2"	41'3"	37'5"	32'9"
1200S250-97	50	42'0"	38'2"	33'4"	47'1"	42'10"	37'5"i	38'2"	34'8"	30'3"	42'10"	38'11"	34'0"

ALLOWABLE FLOOR JOIST TABLE NOTES

1. Spans are based on continuous support of compression flange over the full length of the joist.
2. End shear and web crippling capacity have not been reduced for punchouts.
3. Calculated allowable properties are based on AISI S100-16, NAS for Design of Cold-Formed Steel Structural Members.
4. For two equal spans, the listed span is the center-to-center distance from either end to the center support, with the joist continuous over the center support.
5. Joists must be braced against rotation at all supports.
6. End web crippling check is based on 3.5 inch end bearing. Joist flanges must be fastened to the support.
7. Shear capacity at mid-span support has been reduced for the presence of punchouts adjacent to the support. Mid-span combined bending and shear check based on stiffened web.
8. Deflection checks are computed using unbalanced loads for the two equal span condition.
9. Total load deflection limited to L/240. Live load deflection limit as noted.
10. "e" indicates that web stiffeners are required at the end supports only.
11. " i " indicates that web stiffeners are required at the interior supports only.
12. " a " indicates that web stiffeners are required at all the supports.
13. Allowable flexural strength values in the tables are based on the minimum of local, distortional, and lateral-torsional buckling. Distortional buckling strength is based on a $k\varphi = 0$. Higher values may be obtained when sheathing is applied to the walls resulting in a higher k-phi value.

FLOOR JOIST SPAN TABLES

10 psf Dead Load and 30 psf Live Load													
		Live Load Deflection L/360						Live Load Deflection L/480					
		Single Span			Two Equal Spans			Single Span			Two Equal Spans		
		Spacing (in) o.c.			Spacing (in) o.c.			Spacing (in) o.c.			Spacing (in) o.c.		
Member	Fy (ksi)	12	16	24	12	16	24	12	16	24	12	16	24
600S162-33	33	12'7"e	10'11"e	8'11"e	12'7"i	10'11"a	8'11"a	12'6"e	10'11"e	8'11"e	12'7"i	10'11"a	8'11"a
600S200-33	33	13'5"e	11'7"e	9'6"e	13'5"i	11'7"a	9'3"a	13'1"e	11'7"e	9'6"e	13'5"i	11'7"a	9'3"a
600S162-43	33	15'0"	13'5"	11'0"e	15'6"i	13'5"i	11'0"i	13'8"	12'5"	10'10"e	15'4"i	13'5"i	11'0"i
600S200-43	33	15'9"	13'10"	11'4"e	16'0"i	13'10"i	11'4"i	14'4"	13'0"	11'4"e	16'0"i	13'10"i	11'4"i
600S250-43	33	16'5"	14'3"	11'7"e	16'5"i	14'3"i	11'7"i	15'0"	13'7"	11'7"e	16'5"i	14'3"i	11'7"i
600S162-54	50	16'1"	14'7"	12'9"	18'1"	16'5"i	14'4"i	14'7"	13'3"	11'7"	16'5"	14'11"	13'0"i
600S200-54	50	16'11"	15'4"	13'5"	19'0"	17'3"i	15'1"i	15'4"	14'0"	12'2"	17'3"	15'8"	13'8"i
600S250-54	50	17'8"	16'0"	14'0"	19'10"i	18'0"i	15'6"i	16'0"	14'7"	12'9"	18'0"	16'4"i	14'3"i
600S162-68	50	17'3"	15'8"	13'8"	19'4"	17'7"	15'4"i	15'8"	14'3"	12'5"	17'7"	16'0"	14'0"
600S200-68	50	18'2"	16'6"	14'5"	20'4"	18'6"	16'2"i	16'6"	15'0"	13'1"	18'6"	16'10"	14'8"
600S250-68	50	19'0"	17'3"	15'1"	21'4"	19'5"	16'11"i	17'3"	15'8"	13'9"	19'5"	17'8"	15'5"
600S162-97	50	19'1"	17'4"	15'2"	21'6"	19'6"	17'0"	17'4"	15'9"	13'9"	19'6"	17'9"	15'6"
600S200-97	50	20'2"	18'4"	16'0"	22'7"	20'7"	17'11"	18'4"	16'8"	14'6"	20'7"	18'8"	16'4"
600S250-97	50	21'2"	19'3"	16'9"	23'9"	21'7"	18'10"	19'3"	17'6"	15'3"	21'7"	19'7"	17'2"
800S162-33	33	14'6"e	12'7"e	10'3"e	14'0"a	11'5"a	8'5"a	14'6"e	12'7"e	10'3"e	14'0"a	11'5"a	8'5"a
800S200-33	33	15'7"e	13'6"e	11'0"e	14'7"a	11'10"a	8'9"a	15'7"e	13'6"e	11'0"e	14'7"a	11'10"a	8'9"a
800S162-43	33	17'6"	15'2"e	12'4"e	17'6"i	15'2"i	12'4"a	17'0"	15'2"e	12'4"e	17'6"i	15'2"i	12'4"a
800S200-43	33	18'8"	16'2"e	13'3"e	18'8"i	16'2"i	13'3"a	18'0"	16'2"e	13'3"e	18'8"i	16'2"i	13'3"a
800S250-43	33	19'2"e	16'7"e	13'7"e	19'2"i	16'7"i	13'7"a	18'9"	16'7"e	13'7"e	19'2"i	16'7"i	13'7"a
800S162-54	50	20'2"	18'3"	16'0"	22'7"i	20'3"i	16'6"i	18'3"	16'7"	14'6"	20'6"i	18'8"i	16'4"i
800S200-54	50	21'3"	19'4"	16'10"	23'10"i	21'7"i	17'8"i	19'4"	17'6"	15'4"	21'8"i	19'8"i	17'2"i
800S250-54	50	22'1"	20'1"	17'6"	24'9"i	22'1"i	18'1"i	20'1"	18'3"	15'11"	22'6"i	20'5"i	17'10"i
800S162-68	50	21'9"	19'9"	17'3"	24'5"	22'2"i	19'5"i	19'9"	18'0"	15'8"	22'2"	20'2"	17'7"i
800S200-68	50	22'10"	20'9"	18'1"	25'7"	23'3"i	20'4"i	20'9"	18'10"	16'5"	23'3"	21'2"	18'6"i
800S250-68	50	23'9"	21'7"	18'11"	26'9"	24'3"i	21'2"i	21'7"	19'8"	17'2"	24'3"	22'1"	19'3"i
800S162-97	50	24'2"	22'0"	19'2"	27'2"	24'8"	21'7"	22'0"	20'0"	17'5"	24'8"	22'5"	19'7"
800S200-97	50	25'4"	23'1"	20'2"	28'6"	25'11"	22'7"	23'1"	20'11"	18'4"	25'11"	23'6"	20'6"
800S250-97	50	26'6"	24'1"	21'1"	29'9"	27'1"	23'7"	24'1"	21'11"	19'1"	27'1"	24'7"	21'6"
1000S162-43	33	19'4"e	16'9"e	13'8"e	19'4"a	16'9"a	12'10"a	19'4"e	16'9"e	13'8"e	19'4"a	16'9"a	12'10"a
1000S200-43	33	20'11"e	18'1"e	14'9"e	20'11"a	17'10"a	13'5"a	20'11"e	18'1"e	14'9"e	20'11"a	17'10"a	13'5"a
1000S250-43	33	21'6"e	18'7"e	15'2"e	21'6"a	18'2"a	13'7"a	21'6"e	18'7"e	15'2"e	21'6"a	18'2"a	13'7"a
1000S162-54	50	23'11"	21'9"	18'4"	25'11"i	22'6"i	18'4"i	21'9"	19'9"	17'3"	24'5"i	22'2"i	18'4"i
1000S200-54	50	25'0"	22'9"	19'9"	27'11"i	24'2"i	19'9"i	22'9"	20'8"	18'1"	25'6"i	23'2"i	19'9"i
1000S250-54	50	26'5"	24'0"	20'3"	28'8"i	24'10"i	20'3"i	24'0"	21'10"	19'1"	26'11"i	24'6"i	20'3"i
1000S162-68	50	25'11"	23'7"	20'7"	29'1"i	26'6"i	21'8"i	23'7"	21'5"	18'8"	26'6"	24'0"i	21'0"i
1000S200-68	50	27'1"	24'7"	21'6"	30'5"i	27'8"i	23'2"i	24'7"	22'4"	19'7"	27'8"	25'1"i	21'11"i
1000S250-68	50	28'5"	25'10"	22'7"	31'11"i	29'0"i	23'10"i	25'10"	23'5"	20'6"	29'0"	26'4"i	23'0"i
1000S162-97	50	29'2"	26'6"	23'1"	32'8"	29'9"	26'0"i	26'6"	24'1"	21'0"	29'9"	27'0"	23'7"
1000S200-97	50	30'5"	27'8"	24'2"	34'2"	31'0"	27'1"i	27'8"	25'1"	21'11"	31'0"	28'2"	24'8"
1000S250-97	50	31'8"	28'9"	25'2"	35'7"	32'4"	28'3"i	28'9"	26'2"	22'10"	32'4"	29'4"	25'8"
1200S162-54	50	27'6"e	24'2"e	19'9"e	27'11"a	24'2"a	19'6"a	25'0"e	22'9"e	19'9"e	27'11"a	24'2"a	19'6"a
1200S200-54	50	28'9"e	26'2"e	21'4"e	30'3"a	26'2"a	20'6"a	26'2"e	23'9"e	20'9"e	29'4"a	26'2"a	20'6"a
1200S250-54	50	29'11"e	27'0"e	22'1"e	31'2"a	27'0"a	20'11"a	27'3"e	24'9"e	21'7"e	30'7"a	27'0"a	20'11"a
1200S162-68	50	29'11"	27'2"	23'6"	33'3"i	28'9"i	23'6"i	27'2"	24'8"	21'7"	30'6"i	27'9"i	23'6"i
1200S200-68	50	31'2"	28'4"	24'9"	35'0"i	30'11"i	25'3"i	28'4"	25'9"	22'6"	31'10"i	28'11"i	25'3"i
1200S250-68	50	32'6"	29'6"	25'10"	36'6"i	31'11"i	26'1"i	29'6"	26'10"	23'5"	33'2"i	30'2"i	26'1"i
1200S162-97	50	33'11"	30'10"	26'11"	38'1"	34'7"	30'2"i	30'10"	28'0"	24'5"	34'7"	31'5"	27'5"i
1200S200-97	50	35'4"	32'1"	28'0"	39'8"	36'0"	31'5"i	32'1"	29'2"	25'5"	36'0"	32'9"	28'7"i
1200S250-97	50	36'8"	33'4"	29'1"	41'2"	37'5"i	32'8"i	33'4"	30'3"	26'5"	37'5"	34'0"	29'8"i

ALLOWABLE FLOOR JOIST TABLE NOTES

1. Spans are based on continuous support of compression flange over the full length of the joist.
2. End shear and web crippling capacity have not been reduced for punchouts.
3. Calculated allowable properties are based on AISI S100-16, NAS for Design of Cold-Formed Steel Structural Members.
4. For two equal spans, the listed span is the center-to-center distance from either end to the center support, with the joist continuous over the center support.
5. Joists must be braced against rotation at all supports.
6. End web crippling check is based on 3.5 inch end bearing. Joist flanges must be fastened to the support.
7. Shear capacity at mid-span support has been reduced for the presence of punchouts adjacent to the support. Mid-span combined bending and shear check based on stiffened web.
8. Deflection checks are computed using unbalanced loads for the two equal span condition.
9. Total load deflection limited to L/240. Live load deflection limit as noted.
10. "e" indicates that web stiffeners are required at the end supports only.
11. " i " indicates that web stiffeners are required at the interior supports only.
12. " a " indicates that web stiffeners are required at all the supports.
13. Allowable flexural strength values in the tables are based on the minimum of local, distortional, and lateral-torsional buckling. Distortional buckling strength is based on a $k\varphi = 0$. Higher values may be obtained when sheathing is applied to the walls resulting in a higher k-phi value.

FLOOR JOIST SPAN TABLES

10 psf Dead Load and 40 psf Live Load													
		Live Load Deflection L/360						Live Load Deflection L/480					
		Single Span			Two Equal Spans			Single Span			Two Equal Spans		
		Spacing (in) o.c.			Spacing (in) o.c.			Spacing (in) o.c.			Spacing (in) o.c.		
Member	Fy (ksi)	12	16	24	12	16	24	12	16	24	12	16	24
600S162-33	33	11'3"e	9'9"e	7'11"e	11'3"i	9'9"a	7'7"a	11'3"e	9'9"e	7'11"e	11'3"i	9'9"a	7'7"a
600S200-33	33	12'0"e	10'5"e	8'6"e	12'0"a	10'5"a	7'11"a	11'11"e	10'5"e	8'6"e	12'0"a	10'5"a	7'11"a
600S162-43	33	13'8"	12'0"e	9'10"e	13'11"i	12'0"i	9'10"a	12'5"	11'3"	9'10"e	13'11"i	12'0"i	9'10"a
600S200-43	33	14'4"	12'5"e	10'2"e	14'4"i	12'5"i	10'2"a	13'0"	11'10"	10'2"e	14'4"i	12'5"i	10'2"a
600S250-43	33	14'8"	12'9"e	10'5"e	14'8"i	12'9"i	10'5"a	13'7"	12'4"e	10'5"e	14'8"i	12'9"i	10'5"a
600S162-54	50	14'7"	13'3"	11'7"	16'5"i	14'11"i	13'0"i	13'3"	12'1"	10'7"	14'11"	13'7"i	11'10"i
600S200-54	50	15'4"	14'0"	12'2"	17'3"i	15'8"i	13'6"i	14'0"	12'8"	11'1"	15'8"	14'3"i	12'5"i
600S250-54	50	16'0"	14'7"	12'9"	18'0"i	16'4"i	13'10"i	14'7"	13'3"	11'7"	16'4"	14'10"i	13'0"i
600S162-68	50	15'8"	14'3"	12'5"	17'7"	16'0"	14'0"i	14'3"	12'11"	11'4"	16'0"	14'6"	12'8"
600S200-68	50	16'6"	15'0"	13'1"	18'6"	16'10"	14'8"i	15'0"	13'7"	11'11"	16'10"	15'3"	13'4"
600S250-68	50	17'3"	15'8"	13'9"	19'5"	17'8"i	15'5"i	15'8"	14'3"	12'6"	17'8"	16'0"	14'0"i
600S162-97	50	17'4"	15'9"	13'9"	19'6"	17'9"	15'6"	15'9"	14'4"	12'6"	17'9"	16'1"	14'1"
600S200-97	50	18'4"	16'8"	14'6"	20'7"	18'8"	16'4"	16'8"	15'1"	13'2"	18'8"	17'0"	14'10"
600S250-97	50	19'3"	17'6"	15'3"	21'7"	19'7"	17'2"	17'6"	15'10"	13'10"	19'7"	17'10"	15'7"
800S162-33	33	13'0"e	11'3"e	9'2"e	11'11"a	9'8"a	7'1"a	13'0"e	11'3"e	9'2"e	11'11"a	9'8"a	7'1"a
800S200-33	33	13'11"e	12'1"e	9'6"e	12'5"a	10'0"a	7'3"a	13'11"e	12'1"e	9'6"e	12'5"a	10'0"a	7'3"a
800S162-43	33	15'8"e	13'6"e	11'1"e	15'8"i	13'6"a	11'1"a	15'5"e	13'6"e	11'1"e	15'8"i	13'6"a	11'1"a
800S200-43	33	16'9"e	14'6"e	11'10"e	16'9"i	14'6"a	11'9"a	16'4"e	14'6"e	11'10"e	16'9"i	14'6"a	11'9"a
800S250-43	33	17'2"e	14'10"e	12'2"e	17'2"i	14'10"a	12'0"a	17'0"e	14'10"e	12'2"e	17'2"i	14'10"a	12'0"a
800S162-54	50	18'3"	16'7"	14'6"	20'6"i	18'1"i	14'10"i	16'7"	15'1"	13'2"	18'8"i	16'11"i	14'10"i
800S200-54	50	19'4"	17'6"	15'4"	21'8"i	19'4"i	15'9"i	17'6"	15'11"	13'11"	19'8"i	17'11"i	15'7"i
800S250-54	50	20'1"	18'3"	15'11"	22'6"i	19'9"i	16'2"i	18'3"	16'7"	14'6"	20'5"i	18'7"i	16'2"i
800S162-68	50	19'9"	18'0"	15'8"	22'2"i	20'2"i	17'4"i	18'0"	16'4"	14'3"	20'2"	18'4"	16'0"i
800S200-68	50	20'9"	18'10"	16'5"	23'3"	21'2"i	18'6"i	18'10"	17'1"	14'11"	21'2"	19'2"	16'9"i
800S250-68	50	21'7"	19'8"	17'2"	24'3"i	22'1"i	18'11"i	19'8"	17'10"	15'7"	22'1"	20'0"i	17'6"i
800S162-97	50	22'0"	20'0"	17'5"	24'8"	22'5"	19'7"	20'0"	18'2"	15'10"	22'5"	20'4"	17'10"
800S200-97	50	23'1"	20'11"	18'4"	25'11"	23'6"	20'6"	20'11"	19'0"	16'7"	23'6"	21'4"	18'8"
800S250-97	50	24'1"	21'11"	19'1"	27'1"	24'7"	21'6"	21'11"	19'11"	17'4"	24'7"	22'4"	19'6"
1000S162-43	33	17'4"e	15'0"e	12'3"e	17'4"a	14'8"a	10'11"a	17'4"e	15'0"e	12'3"e	17'4"a	14'8"a	10'11"a
1000S200-43	33	18'8"e	16'2"e	13'2"e	18'8"a	15'4"a	11'4"a	18'8"e	16'2"e	13'2"e	18'8"a	15'4"a	11'4"a
1000S250-43	33	19'3"e	16'8"e	13'7"e	19'0"a	15'7"a	11'6"a	19'3"e	16'8"e	13'7"e	19'0"a	15'7"a	11'6"a
1000S162-54	50	21'9"	19'9"	16'5"	23'2"i	20'1"i	16'5"i	19'9"	17'11"	15'8"	22'2"i	20'1"i	16'5"i
1000S200-54	50	22'9"	20'8"	17'8"e	24'11"i	21'7"i	17'8"i	20'8"	18'9"	16'5"	23'2"i	21'1"i	17'8"i
1000S250-54	50	24'0"	21'10"	18'1"e	25'7"i	22'2"i	18'1"i	21'10"	19'10"	17'4"e	24'6"i	22'2"i	18'1"i
1000S162-68	50	23'7"	21'5"	18'8"	26'6"i	23'9"i	19'5"i	21'5"	19'5"	17'0"	24'0"i	21'10"i	19'1"i
1000S200-68	50	24'7"	22'4"	19'7"	27'8"i	25'1"i	20'9"i	22'4"	20'4"	17'9"	25'1"i	22'10"i	19'11"i
1000S250-68	50	25'10"	23'5"	20'6"	29'0"i	26'1"i	21'4"i	23'5"	21'4"	18'7"	26'4"i	23'11"i	20'11"i
1000S162-97	50	26'6"	24'1"	21'0"	29'9"	27'0"	23'7"i	24'1"	21'10"	19'1"	27'0"	24'6"	21'5"
1000S200-97	50	27'8"	25'1"	21'11"	31'0"	28'2"	24'8"i	25'1"	22'10"	19'11"	28'2"	25'7"	22'5"
1000S250-97	50	28'9"	26'2"	22'10"	32'4"	29'4"	25'8"i	26'2"	23'9"	20'9"	29'4"	26'8"	23'4"
1200S162-54	50	25'0"e	21'8"e	17'8"e	25'0"a	21'8"a	16'9"a	22'9"e	20'8"e	17'8"e	25'0"a	21'8"a	16'9"a
1200S200-54	50	26'2"e	23'5"e	19'1"e	27'0"a	23'3"a	17'6"a	23'9"e	21'7"e	18'10"e	26'8"a	23'3"a	17'6"a
1200S250-54	50	27'3"e	24'2"e	19'9"e	27'11"a	23'9"a	17'10"a	24'9"e	22'6"e	19'7"e	27'9"a	23'9"a	17'10"a
1200S162-68	50	27'2"	24'8"	21'0"	29'8"i	25'9"i	21'0"i	24'8"	22'5"	19'7"	27'9"i	25'2"i	21'0"i
1200S200-68	50	28'4"	25'9"	22'6"	31'10"i	27'8"i	22'7"i	25'9"	23'5"	20'5"	28'11"i	26'3"i	22'7"i
1200S250-68	50	29'6"	26'10"	23'4"	33'0"i	28'7"i	23'4"i	26'10"	24'5"	21'4"	30'2"i	27'4"i	23'4"i
1200S162-97	50	30'10"	28'0"	24'5"	34'7"	31'5"i	27'3"i	28'0"	25'5"	22'3"	31'5"	28'7"	24'11"i
1200S200-97	50	32'1"	29'2"	25'5"	36'0"	32'9"i	28'7"i	29'2"	26'6"	23'1"	32'9"	29'9"	26'0"i
1200S250-97	50	33'4"	30'3"	26'5"	37'5"	34'0"i	29'8"i	30'3"	27'6"	24'0"	34'0"	30'11"	27'0"i

ALLOWABLE FLOOR JOIST TABLE NOTES

1. Spans are based on continuous support of compression flange over the full length of the joist.
2. End shear and web crippling capacity have not been reduced for punchouts.
3. Calculated allowable properties are based on AISI S100-16, NAS for Design of Cold-Formed Steel Structural Members.
4. For two equal spans, the listed span is the center-to-center distance from either end to the center support, with the joist continuous over the center support.
5. Joists must be braced against rotation at all supports.
6. End web crippling check is based on 3.5 inch end bearing. Joist flanges must be fastened to the support.
7. Shear capacity at mid-span support has been reduced for the presence of punchouts adjacent to the support. Mid-span combined bending and shear check based on stiffened web.
8. Deflection checks are computed using unbalanced loads for the two equal span condition.
9. Total load deflection limited to L/240. Live load deflection limit as noted.
10. "e" indicates that web stiffeners are required at the end supports only.
11. " i " indicates that web stiffeners are required at the interior supports only.
12. " a " indicates that web stiffeners are required at all the supports.
13. Allowable flexural strength values in the tables are based on the minimum of local, distortional, and lateral-torsional buckling. Distortional buckling strength is based on a $k\varphi = 0$. Higher values may be obtained when sheathing is applied to the walls resulting in a higher k-phi value.

WEB CRIPPLING LOAD TABLES

WEB CRIPPLING LOAD TABLE NOTES

1. All capacities listed are calculated using AISI S100-16.
2. Web crippling capacities calculated are for studs with stiff ened or partially stiff ened flanges.
3. Tabulated web crippling capacities are for single members only. For multiple members, multiply the tabulated values by number of members in the assembly.
4. Listed allowable capacities are based on members 'fastened to supports', except back-to-back members under two-fl ange loading (condition 3 and 4) for which data for 'fastened to support' is unavailable in the AISI S100-16.
5. Listed allowable capacities are for unpunched webs. Capacity reduction for end and interior one flange loading (conditions 1 and 2) near punchouts may be required per Section G6 of S100.

WEB CRIPPLING CONDITIONS

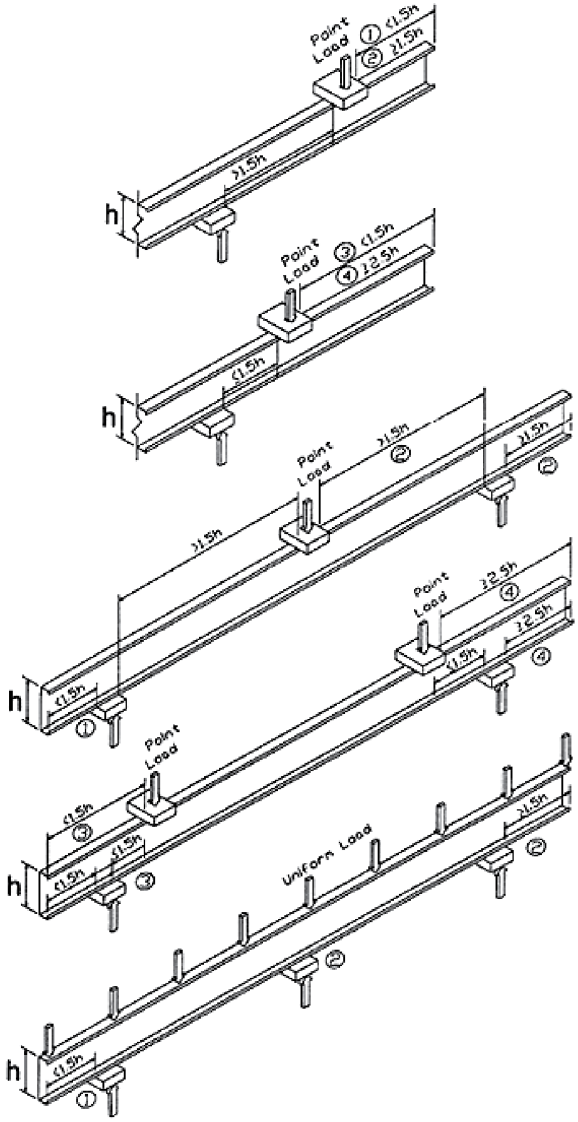

Condition 1: End One-Flange Reaction
Condition 2: Interior One-Flange Reaction
Condition 3: End Two-Flange Reaction
Condition 4: Interior Two-Flange Reaction

WEB CRIPPLING LOAD TABLES

Allowable Web Crippling Loads (lbs) - Single Members

Member	Design Thicknes	Inside Radius	Yield Str	Condition 1				Condition 2				Condition 3				Condition 4			
				1	3.5	4	6	1	3.5	4	6	1	3.5	4	6	1	3.5	4	6
162S - 18	0.0188	0.0843	33	55	90 [1]	95 [1,2]	112 [1,]	87	125 [1]	131 [1,2]	151 [1,2]	45	64 [1]	67 [1,2]	76 [1,2]	122	161 [1]	166 [1,2]	186 [1,]
162S - 27	0.0283	0.0796	33	122	194 [1]	205 [1]	242 [1,]	218	304 [1]	317 [1]	361 [1,2]	111	151 [1]	157 [1]	178 [1,2]	290	371 [1]	383 [1]	425 [1,]
162S - 30	0.0312	0.0781	33	148	233 [1]	246 [1]	290 [1]	269	373 [1]	388 [1]	442 [1]	137	185 [1]	192 [1]	217 [1]	356	452 [1]	466 [1]	516 [1]
162S - 33	0.0346	0.0764	33	180	282 [1]	297 [1]	350 [1]	336	462 [1]	481 [1]	546 [1]	170	229 [1]	237 [1]	267 [1]	441	557 [1]	574 [1]	634 [1]
162S - 43	0.0451	0.0712	33	298	459 [1]	483 [1]	566 [1]	589	793 [1]	823 [1]	929 [1]	297	390 [1]	404 [1]	452 [1]	764	946 [1]	973 [1]	1067 [1]
162S - 54	0.0566	0.0849	33	447	678 [1]	712 [1]	832 [1]	904	1196 [1]	1239 [1]	1390 [1]	471	609 [1]	629 [1]	700 [1]	1203	1466 [1]	1506 [1]	1642 [1]
162S - 54	0.0566	0.0849	50	677	1027 [1]	1079 [1]	1260 [1]	1370	1812 [1]	1877 [1]	2105 [1]	714	922 [1]	953 [1]	1061 [1]	1823	2222 [1]	2281 [1]	2487 [1]
162S - 68	0.0713	0.1069	33	672	1004 [1]	1054 [1]	1225 [1]	1386	1802 [1]	1863 [1]	2077 [1]	750	952 [1]	982 [1]	1087 [1]	1901	2282 [1]	2339 [1]	2536 [1]
162S - 68	0.0713	0.1069	50	1019	1522 [1]	1596 [1]	1856 [1]	2100	2730 [1]	2823 [1]	3148 [1]	1136	1443 [1]	1488 [1]	1646 [1]	2880	3458 [1]	3544 [1]	3842 [1]
250S - 18	0.0188	0.0843	33	52	84	89 [2]	106 [1,]	85	122	128 [2]	147 [1,2]	37	51	54 [2]	61 [1,2]	109	145	150 [2]	168 [1,]
250S - 27	0.0283	0.0796	33	117	186	196	231 [1,]	213	298	310	354 [1,2]	96	130	135	153 [1,2]	268	343	354	393 [1,]
250S - 30	0.0312	0.0781	33	141	223	235	277 [1]	264	366	381	433 [1]	119	161	167	189 [1]	330	420	433	479 [1]
250S - 33	0.0346	0.0764	33	173	271	285	336 [1]	330	453	472	535 [1]	150	201	209	235 [1]	411	519	535	591 [1]
250S - 43	0.0451	0.0712	33	287	443	466	547 [1]	580	780	810	913 [1]	267	351	364	407 [1]	720	892	918	1006 [1]
250S - 54	0.0566	0.0849	33	433	657	690	806 [1]	891	1178	1221	1369 [1]	430	556	574	639 [1]	1142	1392	1429	1558 [1]
250S - 54	0.0566	0.0849	50	656	996	1046	1222 [1]	1350	1785	1850	2075 [1]	652	842	870	968 [1]	1730	2109	2165	2361 [1]
250S - 68	0.0713	0.1069	33	654	977	1024	1191 [1]	1368	1778	1839	2050 [1]	693	880	907	1004 [1]	1815	2179	2233	2421 [1]
250S - 68	0.0713	0.1069	50	990	1480	1552	1805 [1]	2073	2694	2786	3106 [1]	1049	1333	1375	1521 [1]	2750	3302	3384	3669 [1]
350S - 18	0.0188	0.0843	33	49	80	84 [2]	100 [2]	83	119	124 [2]	143 [2]	28	40	42 [2]	48 [2]	98	130	134 [2]	151 [2]
350S - 27	0.0283	0.0796	33	112	177	187	221 [2]	209	292	304	347 [2]	81	111	115	130 [2]	247	316	327	362 [2]
350S - 30	0.0312	0.0781	33	135	214	226	266	259	359	374	425	103	139	144	163	306	389	402	445
350S - 33	0.0346	0.0764	33	166	260	274	323	324	445	463	526	131	175	182	205	384	484	499	551
350S - 43	0.0451	0.0712	33	278	428	451	528	571	768	798	900	240	315	326	365	680	842	866	949
350S - 54	0.0566	0.0849	33	420	638	670	783	879	1162	1204	1351	392	507	524	583	1086	1324	1359	1482
350S - 54	0.0566	0.0849	50	637	967	1016	1186	1331	1761	1825	2046	594	768	794	883	1645	2005	2059	2245
350S - 68	0.0713	0.1069	33	637	951	998	1160	1351	1756	1816	2025	640	813	839	928	1737	2085	2137	2317
350S - 68	0.0713	0.1069	50	965	1441	1512	1758	2047	2661	2752	3068	970	1232	1271	1406	2631	3159	3238	3510
350S - 97	0.1017	0.1525	33	1209	1760	1841	2126	2629	3328	3431	3792	1343	1663	1710	1876	3562	4184	4276	4597
350S - 97	0.1017	0.1525	50	1831	2666	2790	3221	3983	5042	5199	5745	2035	2520	2592	2842	5397	6339	6479	6966
362S - 18	0.0188	0.0843	33	49	79	84 [2]	99 [2]	82	119	124 [2]	143 [2]	27	39	40 [2]	46 [2]	97	128	133 [2]	149 [2]
362S - 27	0.0283	0.0796	33	111	177	186	220 [2]	209	291	303	346 [2]	80	108	113	127 [2]	245	313	324	359 [2]
362S - 30	0.0312	0.0781	33	135	213	224	265	258	358	373	424	101	136	141	160	304	386	398	441
362S - 33	0.0346	0.0764	33	165	259	273	322	323	444	462	525	129	173	179	202	381	480	495	547
362S - 43	0.0451	0.0712	33	277	427	449	526	570	767	796	898	236	311	322	360	675	836	860	943
362S - 54	0.0566	0.0849	33	419	636	668	780	877	1160	1202	1348	388	501	518	577	1079	1316	1351	1473
362S - 54	0.0566	0.0849	50	634	963	1012	1182	1329	1758	1822	2043	588	760	785	874	1635	1994	2047	2232
362S - 68	0.0713	0.1069	33	635	948	995	1157	1349	1754	1813	2022	635	806	831	920	1728	2074	2126	2305
362S - 68	0.0713	0.1069	50	962	1437	1507	1753	2044	2657	2748	3064	961	1221	1259	1393	2618	3143	3221	3492
362S - 97	0.1017	0.1525	33	1206	1755	1837	2120	2626	3324	3427	3787	1333	1651	1698	1862	3547	4166	4258	4578
362S - 97	0.1017	0.1525	50	1827	2659	2783	3212	3979	5036	5192	5738	2020	2501	2573	2821	5374	6313	6452	6936
400S - 27	0.0283	0.0796	33	109	174	183	217 [2]	207	289	301	344 [2]	75	102	106	120 [2]	238	305	315	349 [2]
400S - 30	0.0312	0.0781	33	133	210	221	261	257	356	370	421	95	129	134	151	296	376	388	429
400S - 33	0.0346	0.0764	33	163	256	269	317	322	442	460	522	122	164	170	192	372	469	483	534
400S - 43	0.0451	0.0712	33	274	422	444	520	567	763	792	893	227	299	309	346	662	819	843	924
400S - 54	0.0566	0.0849	33	415	629	661	772	873	1155	1197	1342	376	485	502	558	1061	1293	1328	1448
400S - 54	0.0566	0.0849	50	628	954	1002	1170	1323	1750	1813	2034	569	735	760	846	1607	1960	2012	2194
400S - 68	0.0713	0.1069	33	629	940	986	1147	1344	1746	1806	2014	617	784	809	895	1702	2044	2094	2271
400S - 68	0.0713	0.1069	50	953	1424	1494	1737	2036	2646	2737	3051	936	1188	1226	1356	2579	3097	3173	3441
400S - 97	0.1017	0.1525	33	1197	1742	1823	2105	2617	3312	3415	3774	1305	1616	1662	1823	3504	4116	4207	4523
400S - 97	0.1017	0.1525	50	1814	2640	2762	3189	3965	5018	5175	5718	1978	2448	2518	2761	5309	6236	6374	6853
550S - 27	0.0283	0.0796	33	103	164	173	205 [2]	202	282	294	336 [2]	58	79	82	93 [2]	214	274	283	314 [2]
550S - 30	0.0312	0.0781	33	126	199	210	248	251	348	362	412	76	103	107	120	268	341	351	389
550S - 33	0.0346	0.0764	33	155	243	256	302	315	432	450	511	100	134	139	157	339	428	441	487
550S - 43	0.0451	0.0712	33	262	405	426	499	556	749	778	877	195	256	265	297	614	760	782	858
550S - 54	0.0566	0.0849	33	400	607	638	745	859	1136	1177	1320	331	428	443	493	995	1213	1246	1358
550S - 54	0.0566	0.0849	50	606	920	966	1128	1302	1722	1784	2001	502	649	671	746	1508	1838	1887	2058
550S - 68	0.0713	0.1069	33	609	911	955	1111	1324	1721	1780	1985	557	707	729	807	1611	1934	1982	2149
550S - 68	0.0713	0.1069	50	923	1380	1447	1683	2007	2608	2697	3007	844	1071	1105	1223	2441	2931	3003	3256
550S - 97	0.1017	0.1525	33	1166	1697	1776	2050	2585	3272	3374	3728	1205	1492	1535	1683	3352	3937	4024	4326
550S - 97	0.1017	0.1525	50	1766	2571	2691	3106	3917	4957	5112	5649	1826	2261	2326	2550	5079	5966	6097	6555

WEB CRIPPLING LOAD TABLES

Allowable Web Crippling Loads (lbs) - Single Members																			
Member	Design	Inside	Yield	Condition 1				Condition 2				Condition 3				Condition 4			
	Thicknes	Radius	Str	1	3.5	4	6	1	3.5	4	6	1	3.5	4	6	1	3.5	4	6
600S - 30	0.0312	0.0781	33	124	196	206	244	249	345	360	409	[1]	95	98	111	260	330	340	377
600S - 33	0.0346	0.0764	33	153	240	253	297	313	430	447	507	[1]	125	130	146	330	416	429	473
600S - 43	0.0451	0.0712	33	259	400	420	493	553	745	773	872	185	243	252	282	600	743	764	838
600S - 54	0.0566	0.0849	33	395	600	631	736	855	1131	1172	1314	318	411	425	473	975	1189	1221	1331
600S - 54	0.0566	0.0849	50	599	909	956	1116	1295	1713	1775	1991	482	623	644	716	1478	1802	1850	2017
600S - 68	0.0713	0.1069	33	604	902	946	1100	1319	1714	1772	1976	539	684	706	781	1584	1901	1949	2113
600S - 68	0.0713	0.1069	50	914	1366	1433	1666	1998	2596	2685	2994	816	1036	1069	1183	2399	2881	2952	3201
600S - 97	0.1017	0.1525	50	1752	2551	2669	3081	3902	4939	5093	5628	1781	2205	2268	2487	5010	5885	6014	6466
600S - 118	0.1242	0.1863	50	2528	3625	3788	4354	5698	7108	7318	8046	2734	3339	3429	3741	7555	8772	8952	9581
800S - 43	0.0451	0.0712	33	247	381	401	470	542	730	757	854	150	197	204	228	548	678	698	765
800S - 54	0.0566	0.0849	33	379	576	605	706	839	1110	1150	1290	270	349	361	402	904	1102	1131	1234
800S - 54	0.0566	0.0849	50	575	872	917	1070	1272	1682	1743	1955	409	529	547	608	1370	1670	1714	1869
800S - 68	0.0713	0.1069	33	582	870	912	1061	1297	1686	1744	1944	473	601	619	685	1485	1783	1827	1981
800S - 68	0.0713	0.1069	50	882	1318	1382	1607	1966	2555	2642	2946	716	910	939	1038	2250	2701	2768	3001
800S - 97	0.1017	0.1525	50	1702	2477	2592	2992	3850	4873	5025	5553	1618	2003	2060	2259	4761	5593	5716	6146
800S - 118	0.1242	0.1863	50	2462	3531	3689	4241	5629	7023	7229	7949	2518	3075	3158	3445	7223	8387	8559	9160
1000S - 54	0.0566	0.0849	33	365	554	582	680	826	1092	1132	1269	228	295	305	339	841	1026	1053	1148
1000S - 54	0.0566	0.0849	50	553	840	882	1031	1251	1655	1715	1923	346	447	462	514	1275	1554	1595	1740
1000S - 68	0.0713	0.1069	33	563	842	883	1027	1279	1662	1719	1917	415	527	544	602	1398	1679	1721	1866
1000S - 68	0.0713	0.1069	50	854	1275	1338	1556	1938	2518	2604	2904	629	799	824	912	2119	2544	2607	2827
1000S - 97	0.1017	0.1525	50	1657	2413	2525	2914	3805	4816	4966	5488	1476	1827	1879	2060	4545	5338	5456	5866
1000S - 118	0.1242	0.1863	50	2405	3449	3604	4143	5569	6948	7152	7864	2330	2845	2921	3187	6934	8051	8217	8794
1200S - 68	0.0713	0.1069	33	547	817	857	996	1262	1641	1697	1892	363	462	476	527	1320	1585	1625	1762
1200S - 68	0.0713	0.1069	50	828	1237	1298	1509	1913	2486	2571	2866	551	699	721	798	2001	2402	2462	2669
1200S - 97	0.1017	0.1525	50	1618	2355	2464	2844	3764	4764	4912	5429	1348	1668	1716	1882	4350	5109	5222	5614
1200S - 118	0.1242	0.1863	50	2354	3375	3527	4054	5515	6881	7083	7788	2161	2638	2709	2956	6675	7750	7910	8465
1400S - 68	0.0713	0.1069	33	531	793	832	968	1247	1621	1676	1869	316	401	414	458	1249	1500	1537	1666
1400S - 68	0.0713	0.1069	50	805	1202	1261	1466	1890	2456	2540	2832	479	608	627	694	1892	2272	2329	2525
1400S - 97	0.1017	0.1525	50	1581	2302	2408	2780	3727	4717	4864	5375	1230	1523	1567	1718	4171	4900	5008	5384
1400S - 118	0.1242	0.1863	50	2307	3308	3456	3973	5466	6819	7020	7719	2006	2449	2515	2744	6437	7474	7628	8164
1600S - 97	0.1017	0.1525	50	1547	2252	2357	2721	3692	4673	4818	5325	1121	1388	1428	1566	4005	4705	4809	5170
1600S - 118	0.1242	0.1863	50	2263	3245	3391	3898	5420	6762	6961	7654	1862	2274	2335	2548	6217	7219	7367	7884

[1] Bearing length to web height ratio, N/h, exceeds limit of 2.0

[2] Bearing length to thickness ratio, N/t, exceeds limit of 210

WEB CRIPPLING LOAD TABLES

Allowable Web Crippling Loads (lbs) - Back-to-Back Members

Member	Design Thickness	Inside Radius	Yield Str	Condition 1				Condition 2				Condition 3				Condition 4			
				1	3.5	4	6	1	3.5	4	6	1	3.5	4	6	1	3.5	4	6
162S - 18	0.0188	0.0843	33	124	196	[1] 207	[1,2] 244	[1,2] 156	217	[1] 226	[1,2] 257	[1,2] 76	100	[1] 103	[1,] 116	[1,] 153	202	[1] 209	[1,] 234
162S - 27	0.0283	0.0796	33	268	413	[1] 435	[1] 510	[1,2] 363	489	[1] 507	[1] 572	[1,2] 184	236	[1] 244	[1] 270	[1,] 386	494	[1] 510	[1] 566
162S - 30	0.0312	0.0781	33	321	493	[1] 518	[1] 606	[1] 443	592	[1] 614	[1] 690	[1] 227	288	[1] 298	[1] 329	[1] 478	608	[1] 628	[1] 695
162S - 33	0.0346	0.0764	33	389	593	[1] 623	[1] 729	[1] 547	724	[1] 750	[1] 842	[1] 283	357	[1] 368	[1] 406	[1] 600	757	[1] 781	[1] 862
162S - 43	0.0451	0.0712	33	638	953	[1] 1000	[1] 1163	[1] 933	1211	[1] 1252	[1] 1395	[1] 494	612	[1] 629	[1] 690	[1] 1066	1320	[1] 1358	[1] 1489
162S - 54	0.0566	0.0849	33	949	1395	[1] 1462	[1] 1692	[1] 1427	1820	[1] 1878	[1] 2081	[1] 784	956	[1] 982	[1] 1071	[1] 1696	2068	[1] 2123	[1] 2315
162S - 54	0.0566	0.0849	50	1438	2114	[1] 2215	[1] 2564	[1] 2162	2757	[1] 2846	[1] 3153	[1] 1188	1449	[1] 1488	[1] 1622	[1] 2570	3134	[1] 3217	[1] 3508
162S - 68	0.0713	0.1069	33	1418	2050	[1] 2144	[1] 2470	[1] 2188	2744	[1] 2826	[1] 3113	[1] 1250	1501	[1] 1538	[1] 1667	[1] 2703	3246	[1] 3326	[1] 3606
162S - 68	0.0713	0.1069	50	2148	3106	[1] 3248	[1] 3742	[1] 3315	4157	[1] 4282	[1] 4717	[1] 1894	2274	[1] 2330	[1] 2526	[1] 4096	4918	[1] 5040	[1] 5464
250S - 18	0.0188	0.0843	33	123	196	[1] 206	[1,2] 244	[1,2] 156	216	[1] 225	[1,2] 256	[1,2] 65	85	[1] 88	[1,] 99	[1,] 131	172	[1] 179	[1,] 200
250S - 27	0.0283	0.0796	33	267	412	[1] 434	[1] 509	[1,2] 363	488	[1] 506	[1] 571	[1,2] 164	211	[1] 217	[1] 241	[1,] 344	441	[1] 455	[1] 505
250S - 30	0.0312	0.0781	33	320	492	[1] 517	[1] 605	[1] 443	590	[1] 612	[1] 689	[1] 204	260	[1] 268	[1] 296	[1] 430	547	[1] 564	[1] 625
250S - 33	0.0346	0.0764	33	389	592	[1] 622	[1] 727	[1] 546	723	[1] 749	[1] 840	[1] 256	323	[1] 333	[1] 368	[1] 544	686	[1] 708	[1] 781
250S - 43	0.0451	0.0712	33	637	952	[1] 999	[1] 1162	[1] 932	1209	[1] 1250	[1] 1393	[1] 455	563	[1] 580	[1] 636	[1] 982	1216	[1] 1251	[1] 1371
250S - 54	0.0566	0.0849	33	947	1393	[1] 1460	[1] 1690	[1] 1425	1817	[1] 1876	[1] 2078	[1] 730	890	[1] 914	[1] 997	[1] 1579	1925	[1] 1977	[1] 2155
250S - 54	0.0566	0.0849	50	1435	2111	[1] 2212	[1] 2560	[1] 2159	2753	[1] 2842	[1] 3149	[1] 1106	1349	[1] 1385	[1] 1510	[1] 2393	2917	[1] 2995	[1] 3266
250S - 68	0.0713	0.1069	33	1416	2047	[1] 2141	[1] 2467	[1] 2185	2740	[1] 2823	[1] 3109	[1] 1174	1409	[1] 1444	[1] 1566	[1] 2539	3048	[1] 3124	[1] 3387
250S - 68	0.0713	0.1069	50	2145	3102	[1] 3244	[1] 3737	[1] 3311	4152	[1] 4277	[1] 4711	[1] 1778	2135	[1] 2188	[1] 2373	[1] 3846	4618	[1] 4733	[1] 5131
350S - 18	0.0188	0.0843	33	123	195	[1] 206	[1,2] 243	[1,2] 156	216	[1] 225	[1,2] 256	[1,2] 55	72	[1] 75	[1,] 84	[1,] 110	145	[1] 151	[1,] 169
350S - 27	0.0283	0.0796	33	267	412	[1] 433	[1] 508	[1,2] 362	487	[1] 505	[1] 570	[1,2] 146	187	[1] 193	[1] 214	[1,] 306	391	[1] 404	[1] 448
350S - 30	0.0312	0.0781	33	320	491	[1] 516	[1] 604	[1] 442	589	[1] 611	[1] 688	[1] 183	233	[1] 240	[1] 266	[1] 386	490	[1] 506	[1] 560
350S - 33	0.0346	0.0764	33	388	591	[1] 621	[1] 726	[1] 545	721	[1] 748	[1] 839	[1] 232	292	[1] 301	[1] 333	[1] 492	621	[1] 640	[1] 706
350S - 43	0.0451	0.0712	33	636	951	[1] 997	[1] 1160	[1] 931	1207	[1] 1248	[1] 1391	[1] 419	519	[1] 534	[1] 585	[1] 904	1119	[1] 1151	[1] 1263
350S - 54	0.0566	0.0849	33	946	1392	[1] 1458	[1] 1688	[1] 1423	1815	[1] 1873	[1] 2075	[1] 680	829	[1] 852	[1] 929	[1] 1471	1794	[1] 1842	[1] 2008
350S - 54	0.0566	0.0849	50	1434	2109	[1] 2209	[1] 2557	[1] 2156	2750	[1] 2838	[1] 3144	[1] 1031	1257	[1] 1290	[1] 1407	[1] 2229	2718	[1] 2791	[1] 3043
350S - 68	0.0713	0.1069	33	1414	2045	[1] 2138	[1] 2464	[1] 2183	2737	[1] 2819	[1] 3106	[1] 1104	1326	[1] 1359	[1] 1473	[1] 2388	2867	[1] 2939	[1] 3186
350S - 68	0.0713	0.1069	50	2143	3098	[1] 3240	[1] 3733	[1] 3307	4147	[1] 4272	[1] 4706	[1] 1673	2009	[1] 2059	[1] 2232	[1] 3618	4345	[1] 4452	[1] 4827
350S - 97	0.1017	0.1525	33	2641	3716	[1] 3876	[1] 4431	[1] 4235	5181	[1] 5321	[1] 5809	[1] 2305	2708	[1] 2768	[1] 2976	[1] 4986	5857	[1] 5986	[1] 6435
350S - 97	0.1017	0.1525	50	4002	5631	[1] 5873	[1] 6713	[1] 6416	7850	[1] 8062	[1] 8802	[1] 3493	4103	[1] 4194	[1] 4508	[1] 7555	8874	[1] 9070	[1] 9751
362S - 18	0.0188	0.0843	33	123	195	[1] 206	[1,2] 243	[1,2] 155	216	[1] 225	[1,2] 256	[1,2] 53	70	[1] 73	[1,] 82	[1,] 108	142	[1] 147	[1,] 165
362S - 27	0.0283	0.0796	33	266	411	[1] 433	[1] 508	[1,2] 362	487	[1] 505	[1] 570	[1,2] 144	184	[1] 190	[1] 211	[1,] 301	386	[1] 398	[1] 442
362S - 30	0.0312	0.0781	33	320	491	[1] 516	[1] 604	[1] 442	589	[1] 611	[1] 687	[1] 181	230	[1] 237	[1] 262	[1] 381	484	[1] 499	[1] 553
362S - 33	0.0346	0.0764	33	388	591	[1] 621	[1] 726	[1] 545	721	[1] 747	[1] 839	[1] 229	289	[1] 298	[1] 329	[1] 486	613	[1] 632	[1] 698
362S - 43	0.0451	0.0712	33	636	950	[1] 997	[1] 1160	[1] 930	1207	[1] 1248	[1] 1391	[1] 415	514	[1] 528	[1] 579	[1] 895	1109	[1] 1140	[1] 1250
362S - 54	0.0566	0.0849	33	946	1391	[1] 1458	[1] 1687	[1] 1423	1815	[1] 1873	[1] 2075	[1] 675	823	[1] 845	[1] 921	[1] 1459	1779	[1] 1826	[1] 1992
362S - 54	0.0566	0.0849	50	1433	2108	[1] 2208	[1] 2557	[1] 2156	2750	[1] 2838	[1] 3144	[1] 1022	1246	[1] 1280	[1] 1395	[1] 2211	2695	[1] 2767	[1] 3017
362S - 68	0.0713	0.1069	33	1414	2045	[1] 2138	[1] 2463	[1] 2182	2737	[1] 2819	[1] 3105	[1] 1096	1316	[1] 1349	[1] 1463	[1] 2371	2847	[1] 2918	[1] 3163
362S - 68	0.0713	0.1069	50	2143	3098	[1] 3239	[1] 3732	[1] 3307	4147	[1] 4271	[1] 4705	[1] 1661	1995	[1] 2044	[1] 2216	[1] 3592	4314	[1] 4421	[1] 4793
362S - 97	0.1017	0.1525	33	2641	3716	[1] 3875	[1] 4430	[1] 4234	5180	[1] 5320	[1] 5809	[1] 2292	2693	[1] 2752	[1] 2959	[1] 4957	5823	[1] 5952	[1] 6399
362S - 97	0.1017	0.1525	50	4001	5630	[1] 5872	[1] 6713	[1] 6416	7849	[1] 8061	[1] 8801	[1] 3473	4080	[1] 4170	[1] 4483	[1] 7511	8823	[1] 9018	[1] 9695
400S - 27	0.0283	0.0796	33	266	411	433	[1] 507	[1,2] 362	486	505	[1] 569	[1,2] 138	177	182	[1] 202	[1,] 289	370	382	[1] 424
400S - 30	0.0312	0.0781	33	320	490	516	[1] 604	[1] 441	589	611	[1] 687	[1] 174	221	228	[1] 252	[1] 366	465	480	[1] 531
400S - 33	0.0346	0.0764	33	388	591	621	[1] 726	[1] 545	721	747	[1] 838	[1] 221	279	287	[1] 317	[1] 469	592	610	[1] 673
400S - 43	0.0451	0.0712	33	635	950	997	[1] 1159	[1] 930	1206	1247	[1] 1390	[1] 403	499	513	[1] 563	[1] 870	1077	1108	[1] 1215
400S - 54	0.0566	0.0849	33	946	1391	1457	[1] 1687	[1] 1422	1814	1872	[1] 2074	[1] 658	803	824	[1] 899	[1] 1424	1736	1782	[1] 1943
400S - 54	0.0566	0.0849	50	1433	2107	2207	[1] 2556	[1] 2155	2748	2836	[1] 3143	[1] 998	1216	1249	[1] 1361	[1] 2157	2630	2700	[1] 2944
400S - 68	0.0713	0.1069	33	1414	2044	2137	[1] 2462	[1] 2181	2736	2818	[1] 3104	[1] 1074	1289	1321	[1] 1432	[1] 2322	2788	2857	[1] 3098
400S - 68	0.0713	0.1069	50	2142	3097	3238	[1] 3731	[1] 3305	4145	4270	[1] 4703	[1] 1627	1953	2002	[1] 2170	[1] 3518	4224	4329	[1] 4694
400S - 97	0.1017	0.1525	33	2640	3715	3874	[1] 4429	[1] 4233	5178	5319	[1] 5807	[1] 2254	2648	2706	[1] 2909	[1] 4875	5726	5853	[1] 6292
400S - 97	0.1017	0.1525	50	4000	5628	5870	[1] 6711	[1] 6414	7846	8059	[1] 8798	[1] 3415	4012	4100	[1] 4408	[1] 7386	8676	8868	[1] 9534
550S - 27	0.0283	0.0796	33	266	410	432	506	[1,2] 361	485	504	568	[1,2] 116	149	154	171	[1,] 244	312	322	357
550S - 30	0.0312	0.0781	33	319	489	515	603	[1] 441	588	610	686	[1] 149	189	195	216	[1] 314	399	411	455
550S - 33	0.0346	0.0764	33	387	590	620	724	[1] 544	720	746	836	[1] 192	242	250	276	[1] 407	514	530	585
550S - 43	0.0451	0.0712	33	634	948	995	1157	[1] 928	1204	1245	1388	[1] 361	447	459	504	[1] 778	964	991	1087
550S - 54	0.0566	0.0849	33	944	1389	1455	1684	[1] 1420	1811	1869	2071	[1] 600	732	751	819	[1] 1298	1582	1624	1771
550S - 54	0.0566	0.0849	50	1431	2104	2204	2552	[1] 2152	2744	2832	3138	[1] 909	1108	1138	1241	[1] 1966	2397	2461	2683
550S - 68	0.0713	0.1069	33	1412	2041	2134	2459	[1] 2179	2732	2814	3100	[1] 993	1192	1222	1324	[1] 2147	2578	2642	2864
550S - 68	0.0713	0.1069	50	2139	3092	3234	3726	[1] 3301	4139	4264	4697	[1] 1504	1806	1851	2007	[1] 3253	3906	4003	4340
550S - 97	0.1017	0.1525	33	2637	3710	3870	4424	[1] 4228	5172	5313	5800	[1] 2119	2489	2544	2735	[1] 4583	5383	5502	5915
550S - 97	0.1017	0.1525	50	3995	5622	5863	6703	[1] 6406	7837	8049	8788	[1] 3211	3771	3855	4144	[1] 6944	8157	8337	8963

WEB CRIPPLING LOAD TABLES

Allowable Web Crippling Loads (lbs) - Back-to-Back Members

Member	Design Thickness	Inside Radius	Yield Str	Condition 1				Condition 2				Condition 3				Condition 4			
				1	3.5	4	6	1	3.5	4	6	1	3.5	4	6	1	3.5	4	6
600S - 30	0.0312	0.0781	33	319	489	514	602 [1]	440	587	609	685 [1]	141	180	185	205 [1]	298	379	391	433 [1]
600S - 33	0.0346	0.0764	33	387	589	619	724 [1]	543	719	745	836 [1]	183	231	238	263 [1]	389	491	506	559 [1]
600S - 43	0.0451	0.0712	33	634	948	995	1157 [1]	928	1204	1245	1387 [1]	348	431	443	486 [1]	751	930	956	1048 [1]
600S - 54	0.0566	0.0849	33	944	1388	1454	1683 [1]	1420	1810	1868	2070 [1]	583	710	729	795 [1]	1260	1536	1577	1719 [1]
600S - 54	0.0566	0.0849	50	1430	2103	2203	2551 [1]	2151	2743	2831	3136 [1]	883	1076	1105	1205 [1]	1909	2327	2389	2605 [1]
600S - 68	0.0713	0.1069	33	1411	2040	2133	2458 [1]	2178	2731	2813	3099 [1]	968	1163	1192	1292 [1]	2095	2515	2577	2794 [1]
600S - 68	0.0713	0.1069	50	2138	3091	3233	3724 [1]	3299	4138	4262	4695 [1]	1467	1762	1806	1958 [1]	3173	3811	3905	4234 [1]
600S - 97	0.1017	0.1525	50	3994	5620	5861	6701 [1]	6404	7834	8046	8785 [1]	3150	3700	3781	4065 [1]	6812	8001	8178	8792 [1]
600S - 118	0.1242	0.1863	50	5696	7892	8218	9351 [1]	9325	11257	11543	12540 [1]	4808	5583	5698	6097 [1]	10398	12074	12322	13187 [1]
800S - 43	0.0451	0.0712	33	633	946	993	1154	926	1202	1242	1384	302	374	384	421	651	806	829	909
800S - 54	0.0566	0.0849	33	942	1386	1452	1681	1417	1807	1865	2067	519	633	650	709	1123	1369	1405	1532
800S - 54	0.0566	0.0849	50	1428	2100	2200	2546	2147	2738	2826	3131	787	959	985	1074	1701	2074	2129	2322
800S - 68	0.0713	0.1069	33	1409	2037	2130	2455	2174	2727	2809	3094	881	1058	1084	1175	1905	2287	2344	2542
800S - 68	0.0713	0.1069	50	2135	3087	3228	3719	3295	4132	4256	4688	1335	1602	1642	1780	2886	3466	3552	3851
800S - 97	0.1017	0.1525	50	3989	5613	5854	6692	6396	7825	8036	8774	2929	3441	3517	3781	6335	7442	7606	8177
800S - 118	0.1242	0.1863	50	5690	7883	8209	9341	9314	11244	11530	12526	4514	5241	5349	5724	9762	11335	11568	12380
1000S - 54	0.0566	0.0849	33	941	1384	1450	1678	1415	1805	1863	2064	464	565	580	633	1003	1222	1255	1368
1000S - 54	0.0566	0.0849	50	1426	2097	2196	2543	2144	2735	2822	3127	702	856	879	959	1519	1852	1901	2073
1000S - 68	0.0713	0.1069	33	1407	2035	2128	2451	2172	2723	2805	3090	804	965	989	1073	1739	2088	2140	2320
1000S - 68	0.0713	0.1069	50	2132	3083	3224	3714	3290	4126	4250	4682	1218	1463	1499	1625	2635	3164	3242	3515
1000S - 97	0.1017	0.1525	50	3985	5607	5848	6685	6389	7816	8028	8764	2737	3215	3286	3533	5919	6953	7107	7640
1000S - 118	0.1242	0.1863	50	5684	7875	8200	9332	9305	11233	11519	12514	4257	4943	5045	5399	9208	10691	10911	11677
1200S - 68	0.0713	0.1069	33	1406	2032	2125	2449	2169	2720	2802	3086	735	883	904	981	1590	1909	1956	2121
1200S - 68	0.0713	0.1069	50	2130	3079	3220	3710	3287	4122	4245	4676	1114	1337	1370	1486	2408	2892	2964	3213
1200S - 97	0.1017	0.1525	50	3981	5601	5842	6678	6383	7808	8020	8756	2564	3012	3078	3309	5545	6514	6658	7158
1200S - 118	0.1242	0.1863	50	5679	7868	8193	9323	9297	11223	11508	12503	4027	4676	4772	5107	8710	10113	10321	11046
1400S - 68	0.0713	0.1069	33	1404	2030	2123	2446	2167	2717	2799	3083	672	806	826	896	1452	1744	1787	1938
1400S - 68	0.0713	0.1069	50	2127	3076	3216	3706	3283	4117	4241	4671	1018	1222	1252	1358	2201	2642	2708	2936
1400S - 97	0.1017	0.1525	50	3977	5596	5837	6672	6377	7801	8013	8748	2406	2826	2888	3105	5203	6111	6246	6715

FASTENERS (SCREWS AND WELDS)

SCREW TABLE NOTES

1. Allowable screw connection capacities are based on Section J4 of the AISI S100-16.
2. When connecting materials of diff erent steel thicknessess or tensile strengths, use the lowest values. Tabulated values assume two sheets of equal thickness are connected.
3. Screw shear and tension capacities was developed using published screw manufacturer data and evaluation reports available at the time of publications.
4. A nominal shear stress of 42.85ksi and a nominal tension stress of 40.84ksi was used for calculations based on screw manufacturer data.
5. Screw capacities are based on Allowable Strength Design (ASD) and include safety factor of 3.0.
6. When multiple fasteners are used, screws are assumed to have a center-to-center spacing of at least 3 times the nominal diameter (d).
7. Screws are assumed to have a center-of-screw to edge-of-steel dimension of at least 1.5 times the nominal diameter (d) of the screw.
8. Tension capacity is based on the lesser of pullout capacity in sheet closest to screw tip, or pullover capacity for sheet closest to screw head (using head diameter).
9. Note that for all tension values calculated in screw table, pullover values have been reduced by 50% assuming eccentrically loaded connections that produce a non uniform pullover force of the fastener.
10. Screw capacities are governed by a conservative estimate of screw capacity, not by sheet steel failure.
11. For higher screw capacities, especially for screw strength, use specific screws from specific manufacturer. See manufacturer's data for specific allowable values and installation instructions.

Allowable Screw Connection Capacity (Pounds per Screw)

Thickness (Mils)	Yield Strength, Fy (ksi)	Tensile Strength, Fu (ksi)	#6 Screw (0.138" Dia, 1/4"		#8 Screw (0.164" Dia, 5/16"		#10 Screw (0.190" Dia, 0.340"		#12 Screw (0.216" Dia, 0.340"		1/4" Screw (0.250" Dia, 0.409" Head)	
			Shear	Tension	Shear	Tension	Shear	Tension	Shear	Tension	Shear	Tension
18	33	33	44	24	48	29	52	33	55	38	60	44
27	33	33	82	37	89	43	96	50	102	57	110	66
30	33	33	95	40	103	48	111	55	118	63	127	73
33	33	45	151	61	164	72	177	84	188	95	203	110
43	33	45	214	79	244	94	263	109	280	124	302	144
54	33	45	214	100	303	118	370	137	394	156	424	180
54	50	65	214	123	303	171	406	198	525	225	613	261
68	33	45	214	123	303	149	406	173	525	196	600	227
68	50	65	214	123	303	173	406	232	525	284	704	328
97	33	45	214	123	303	173	406	232	525	280	704	324
97	50	65	214	123	303	173	406	232	525	300	704	403
118	33	45	214	123	303	173	406	232	525	300	704	396
118	50	65	214	123	303	173	406	232	525	300	704	403

FASTENERS (SCREWS AND WELDS)

WELD TABLE NOTES

1. Allowable weld capacities are based on Section J2.4 (for fillet welds) and J2.5 (for flare groove welds) of the AISI S100-16.
2. When connecting materials of diff erent steel thicknesses or tensile strengths, use the lowest values.
3. Weld capacities are based on Allowable Strength Design (ASD) and include appropriate safety factors.
4. Weld capacities are based on either 3/32" or 1/8" diameter E60 or E70 Electrodes. For thinner materials, 0.030" to 0.035" diameter wire electrodes may provide best results.
5. Parallel capacity is considered to be loading in the direction of the weld.
6. For flare groove welds, the effective throat of weld is conservatively assumed to be less that 2t.

Allowable Screw Connection Capacity (Pounds per Screw)												
Thickness (Mils)	Yield Strength, Fy (ksi)	Tensile Strength, Fu (ksi)	# 6 Screw		# 8 Screw		# 10 Screw		# 12 Screw		1/4" Screw	
			(0.138" Dia, 1/4" Head)		(0.164" Dia, 5/16" Head)		(0.190" Dia, 0.340" Head)		(0.216" Dia, 0.340" Head)		(0.250" Dia, 0.409" Head)	
			Shear	Tension	Shear	Tension	Shear	Tension	Shear	Tension	Shear	Tension
18	33	33	44	24	48	29	52	33	55	38	60	44
27	33	33	82	37	89	43	96	50	102	57	110	66
30	33	33	95	40	103	48	111	55	118	63	127	73
33	33	45	151	61	164	72	177	84	188	95	203	110
43	33	45	214	79	244	94	263	109	280	124	302	144
54	33	45	214	100	303	118	370	137	394	156	424	180
54	50	65	214	123	303	171	406	198	525	225	613	261
68	33	45	214	123	303	149	406	173	525	196	600	227
68	50	65	214	123	303	173	406	232	525	284	704	328
97	33	45	214	123	303	173	406	232	525	280	704	324
97	50	65	214	123	303	173	406	232	525	300	704	403
118	33	45	214	123	303	173	406	232	525	300	704	396
118	50	65	214	123	303	173	406	232	525	300	704	403

Note-1: For fillet welds, AISI S100 Equation E2.5-4 must be checked for 118 mil material, or whenever the thickness of thinnest part is greater that 0.10-inch.

Note-2: For flare groove welds, AISI S100 Equation E2.6-4 must be checked for 118 mil material, or whenever the thickness of thinnest part is greater that 0.10-inch.